Geared Piston Air Motors



ARMAK MOTORS

Issue 03.20

ARMAK GEARED PISTON AIR MOTORS

The latest technology in air motors…

Armak has been continually developing over the past 7 years a contact free rotary piston design of geared piston motor, with a versatile range of control and output devices to suit all users requirements.

The motors simple and compact design gives a longer lifespan with low operating and maintenance costs. The Armak motor range covers an extensive range of applications, they can also directly replace the RM radial piston motor offering greater power output.



Features of the new Technology…

- Non vibrating operation throughout, even at high speeds.
- Contact free rotating piston, resulting in long lifetime with reduced maintenance.
- Completely enclosed motor casing preventing internal corrosion. Without the use of an internal oil sump.
- Compact design with total freedom of installation.
- Configurations can be mounted in all orientations shaft vertical or horizontal.
- Usable speed ranges from 75 rpm, high start torque.
- Metric flange to IEC B5 configuration for standard gearbox input. SAE flange for pump mounting upon request.
- Motor AGP-F-range with key and keyway shaft for belt or chain drive and mounting on brakes.
- Motor AGP-V-range with internal splined output and the option of flexible drive.
- Extensions for inline direct mounting of gearboxes or other equipment.
- Infinitely variable control with Armak lever or remote control valves including emergency stop shut off valve.
- ATEX II cat. 2 GDcT5 and ATEX I M2 can be supplied, valid under ATEX operating parameters.
- Minimal maintenance with exceptional bearing and sealed for life construction.

What is the Function of the new Technology?

The torque is developed by one power piston which is transferred to the output shaft by a second contact free rotating piston via a precision synchronised gear train. Both pistons rotate without physical contact resulting in near frictionless operation producing torque efficiencies in excess of 98%.The result being long maintenance free operation without downtime. The totally closed motor housing without breather holes permits applications in wet or dirty surroundings without corrosion inside the motor.

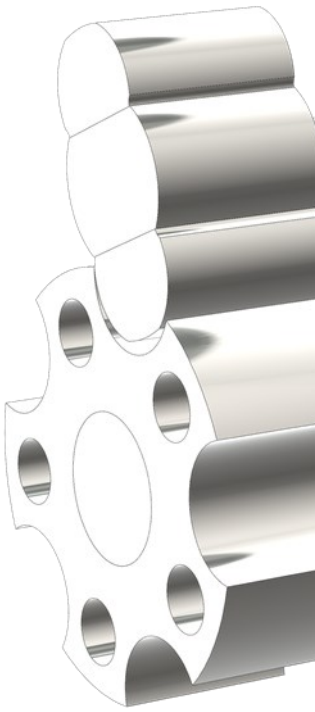

Modular Design

Armak building block design allows simple configurations to suit the individual application criteria. Control valves including Remote, Lever and Emergency stop are all bolt on options, Industry standard Brakes, Gears and Silencers are also available.

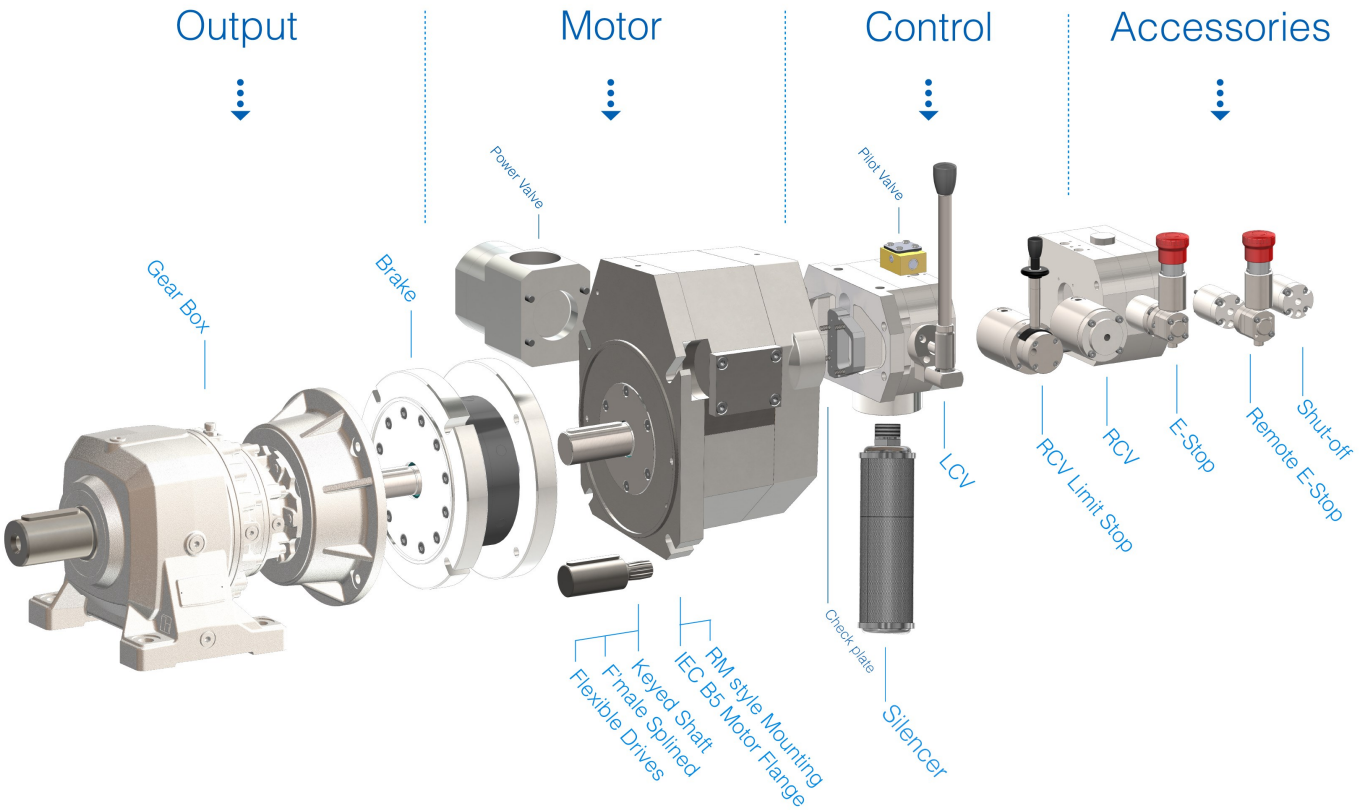

ARMAX MOTORS

1.8kW · 3.5kW · 7.3kW · 8kW · 11kW · 16kW

Application Notes

All data are valid only with sufficient air supply to meet the motors inlet requirements.

All incoming air must be treated by a FRL i.e. filtered, water removed, pressure regulated and oil drip feed before entering the motors. Pressure loss due to FRL, silencer, valves and piping must be considered.

Always use correctly sized pipe work, fittings and valves with the net cross section for air flow equivalent to, if not larger than the motor connection ports.

If the motor must start under load (e.g. winches) Use 60% of the dynamic torque for calculations.

When sizing gearing, consider stall conditions and also inertia forces especially when brakes are fitted. Also consider gearbox efficiency. Typical helical / epicyclic gears are up to 97% per stage and worm gears can be as low as 50% in high ratio configurations.

Due to the motors very high torque efficiency, it is possible when running the motors without load that very high rotational speeds can be achieved. Care must be taken when designing the circuit to ensure the maximums for motor or other drive components are not exceeded. FRL and Exhaust restriction are utilised to minimise the potential.

Air Motor Data

Motor	Data at max Power and 6 Bar			Start Torque	Max. Cont	Mass
	kW	rpm	Nm	Nm	rpm	Kg
AGP01	1.8	2700	6.6	6.3	3000	12
AGP04	3.5	2700	15	13	2600	14
AGP06	6	2700	26	20	2600	17
AGP07	8.0	1600	50	90	1800	60
AGP10	11	1000	105	110	1800	75
AGP16	16	1500	105	110	1800	85

All of the above motors are produced to IEC B5 flange electric motor mounting configuration. This ensures ease of instillation with all industry standard transmission equipment.

An additional range of motor interfaces, ensuring total interchangeability with the globe radial piston motor are also available. (see table below)

AGP110	1.8	2700	6.6	6.3	3000	12
AGP210	3.5	2700	15	13	2600	14
AGP310	8.0	1600	50	55	1800	60
AGP410	11	1000	105	110	1800	75
AGP510	16	1500	105	110	1800	85

Final Note

In order to assure long and trouble free operation above data and additional data from the service manual must be adhered to.

ARMAX MOTORS

1.8kW · 3.5kW · 7.3kW · 8kW · 11kW · 16kW

AGP01/AGP110E Performance Data

Max Inlet Pressure	8bar	**Min. Speed**	150rpm
Air Line Connection	G 3/4” [BSPP]	**Operating Temp**	-10 / +80ºC
Mass	12kg	**Max. Air Inlet Temp**	65ºC
Max Power at 6bar	1.8kW	**Air Lubrication Short Run**	6-10 drops/min
Speed at 6bar (Max. Power)	2700rpm	**Air Lubrication Cont. Run**	3-4 drops/min
Torque at 6bar (Max. Power)	6.6Nm	**Radial Force Middle of Shaft**	2000N
Starting Torque at 6bar	6.3Nm	**Axial Force on Shaft**	20N
Max. Cont. Speed	3000rpm		

Torque

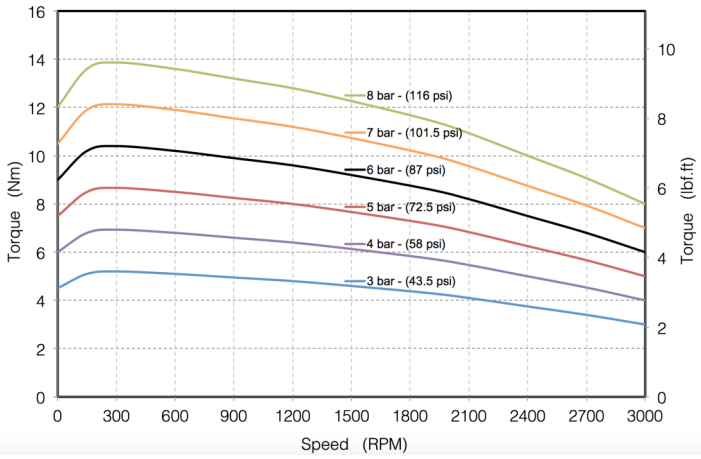

Power

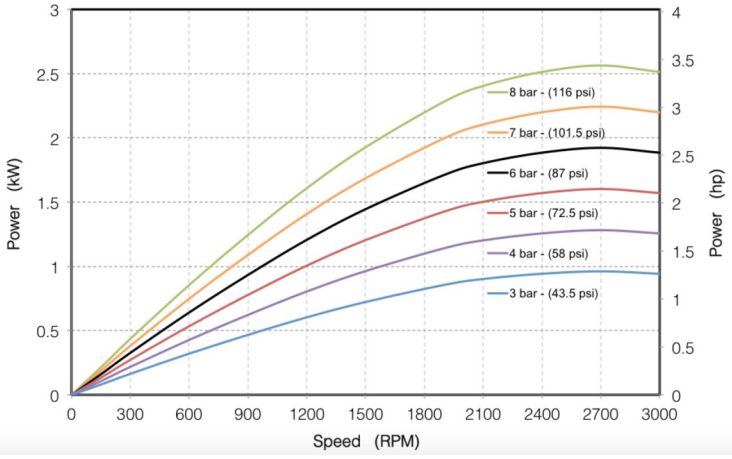

Air Consumption

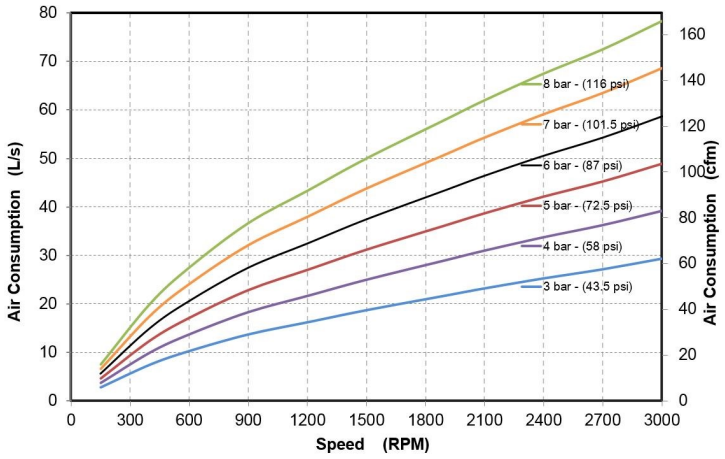

Performance specified including control valves and silencers

AGP01BE

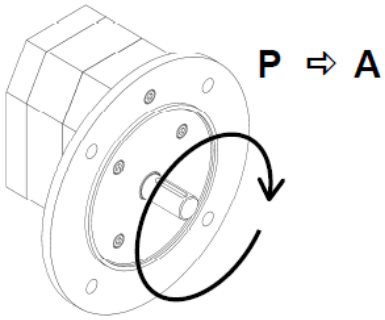

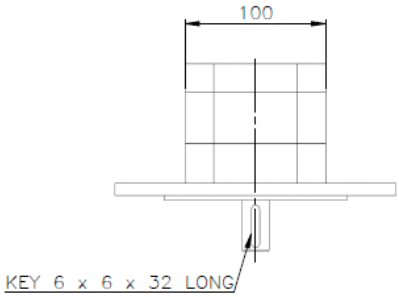

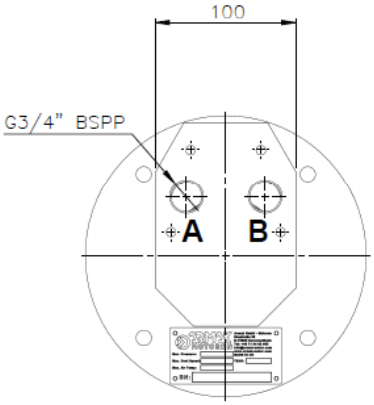

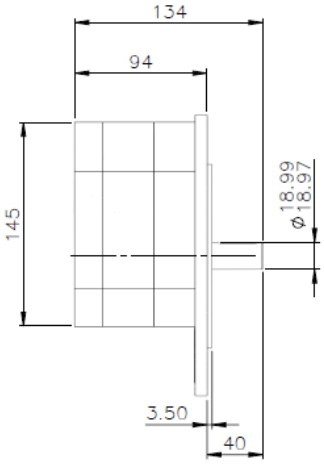

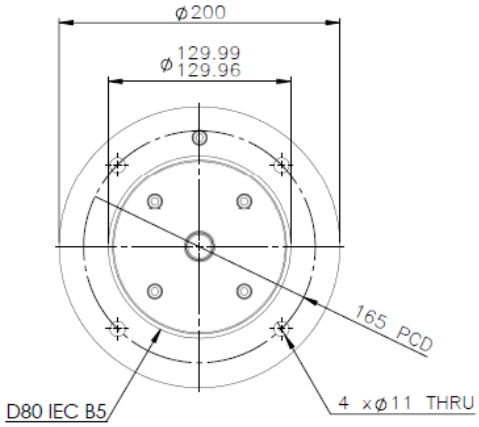

AGP110E

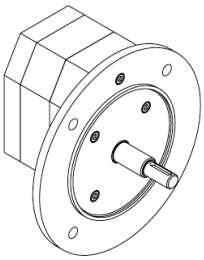

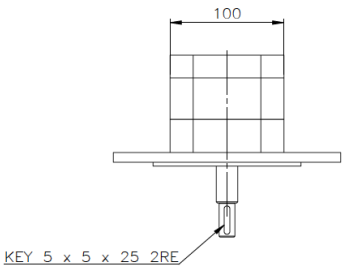

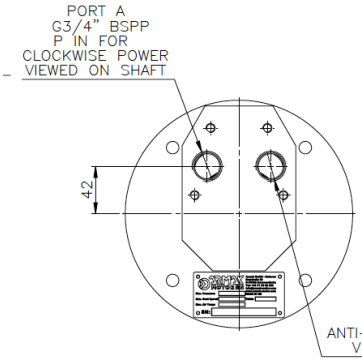

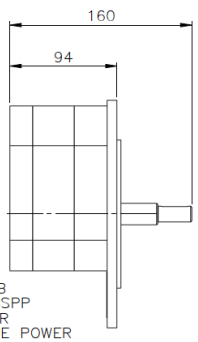

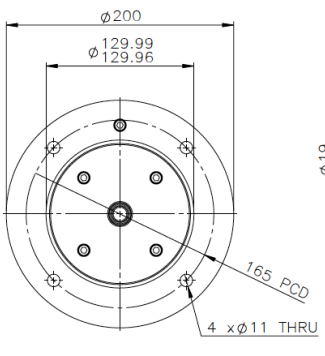

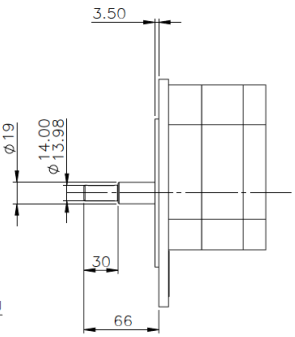

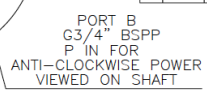

ARMAX MOTORS

1.8kW · **3.5kW** · 7.3kW · 8kW · 11kW · 16kW

AGP04/AGP210E Performance Data

Max Inlet Pressure	8bar	**Min. Speed**	75rpm
Air Line Connection	G 3/4" [BSPP]	**Operating Temp**	-10 / +80ºC
Mass	14kg	**Max. Air Inlet Temp**	65ºC
Max Power at 6bar	3.5kW	**Air Lubrication Short Run**	6-10 drops/min
Speed at 6bar (Max. Power)	2700rpm	**Air Lubrication Cont. Run**	3-4 drops/min
Torque at 6bar (Max. Power)	15Nm	**Radial Force Middle of Shaft**	2000N
Starting Torque at 6bar	13Nm	**Axial Force on Shaft**	20N
Max. Cont. Speed	2600rpm		

Torque

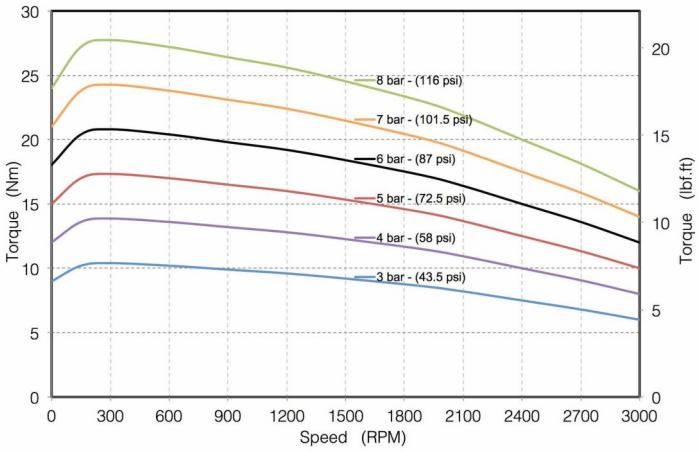

Power

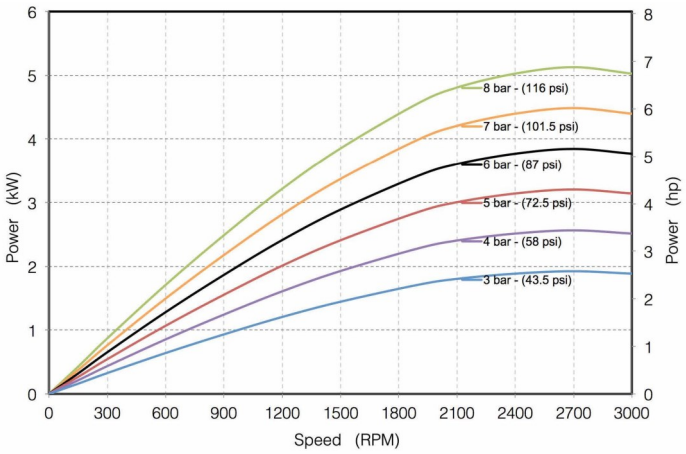

Air Consumption

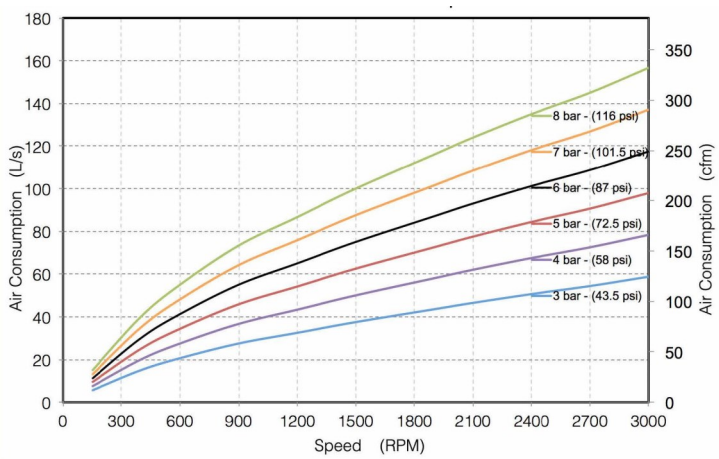

Performance specified including control valves and silencers

AGP04BE

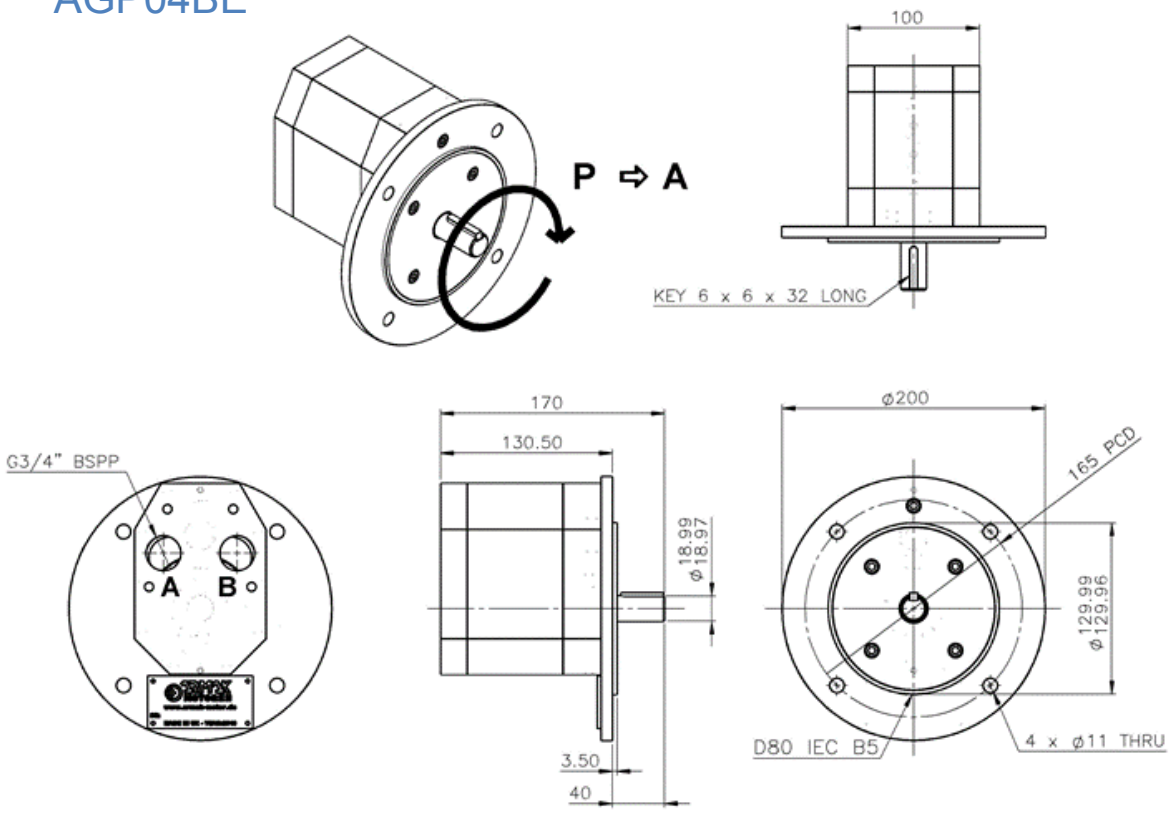

AGP210E

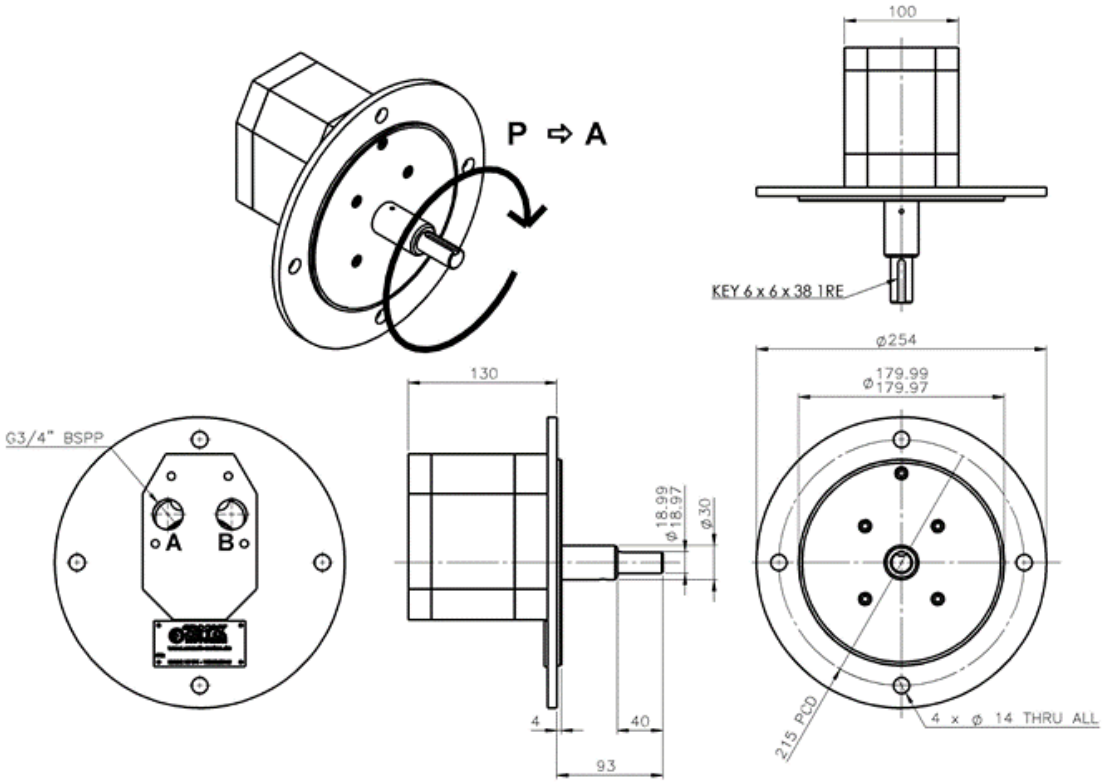

Armak Comparison

This Range of Armak motors are fully interchangeable with the radial piston design.

Below is a pictorial representation of the variance in the two designs and how much more compact the Armak GP range are.

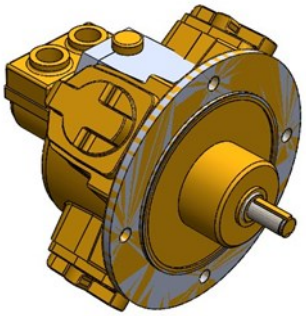

Armak Geared Piston Design

Radial Piston Design

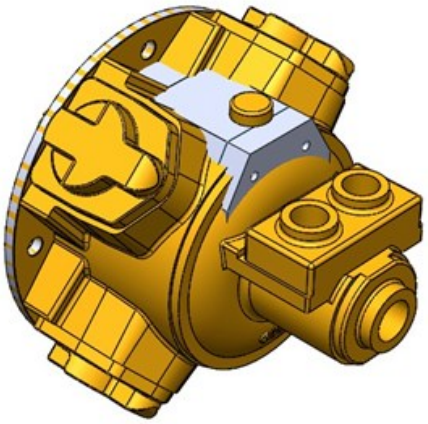

ARMAX MOTORS

1.8kW · 3.5kW · **7.3kW** · 8kW · 11kW · 16kW

AGP06 Performance Data

Max Inlet Pressure	8bar	**Min. Speed**	75rpm
Air Line Connection	G 3/4” [BSPP]	**Operating Temp**	-10 / +80ºC
Mass	17kg	**Max. Air Inlet Temp**	65ºC
Max Power at 6bar	7.3kW	**Air Lubrication Short Run**	6-10 drops/min
Speed at 6bar (Max. Power)	2700rpm	**Air Lubrication Cont. Run**	3-4 drops/min
Torque at 6bar (Max. Power)	26Nm	**Radial Force Middle of Shaft**	2000N
Starting Torque at 6bar	20Nm	**Axial Force on Shaft**	20N
Max. Cont. Speed	2600rpm		

Torque

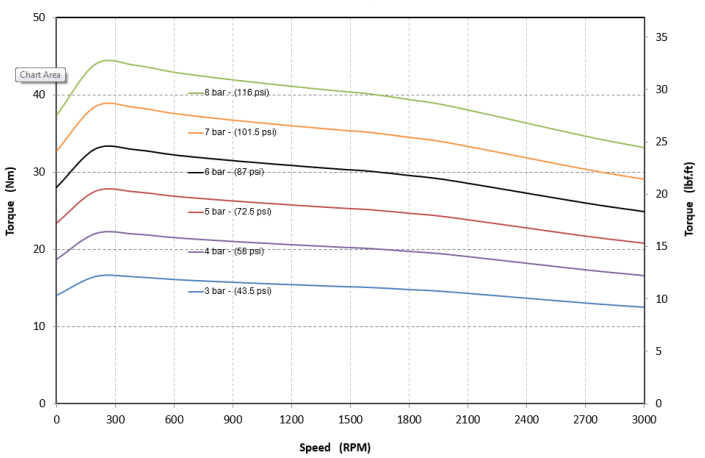

Power

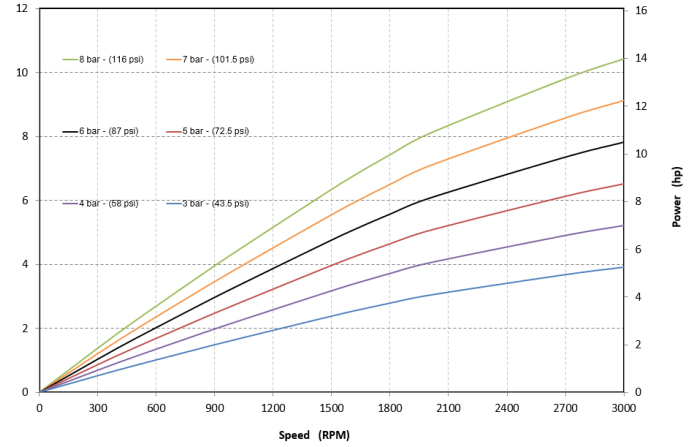

Air Consumption

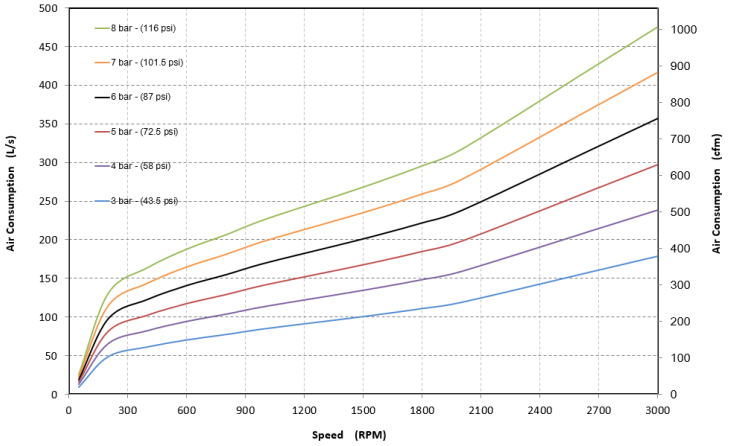

Performance specified including control valves and silencers

AGP06BE

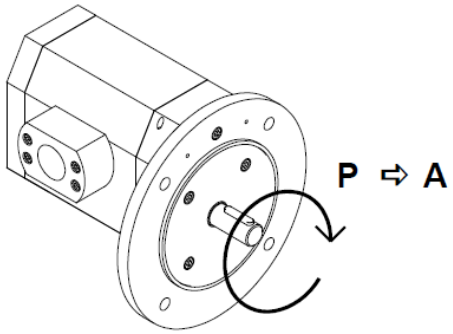

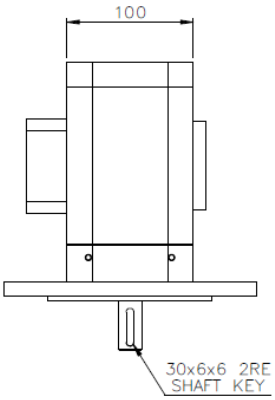

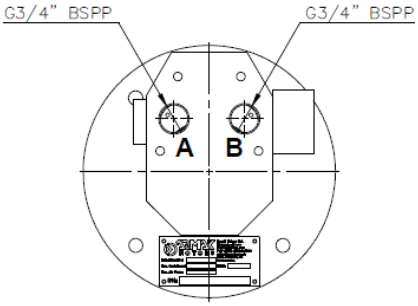

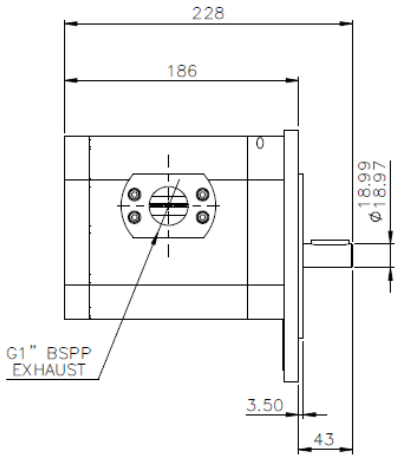

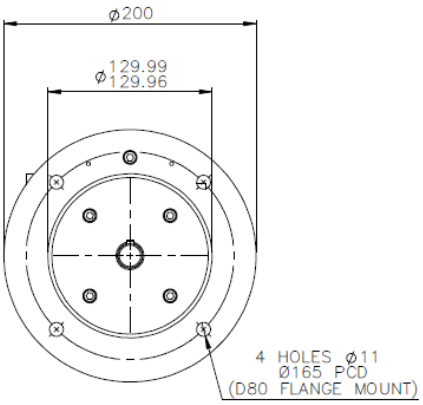

Performance specified including control valves and silencers

ARMAX MOTORS

1.8kW · 3.5kW · 7.3kW · **8kW** · 11kW · 16kW

AGP07/AGP310A Performance Data

Max Inlet Pressure	8bar	**Min. Speed**	75rpm
Air Line Connection	G 2” [BSPP]	**Operating Temp**	-10 / +80ºC
Mass	60kg	**Max. Air Inlet Temp**	65ºC
Max Power at 6bar	8kW	**Air Lubrication Short Run**	6-10 drops/min
Speed at 6bar (Max. Power)	1600rpm	**Air Lubrication Cont. Run**	3-4 drops/min
Torque at 6bar (Max. Power)	50Nm	**Radial Force Middle of Shaft**	10000N
Starting Torque at 6bar	55Nm	**Axial Force on Shaft**	100N
Max. Cont. Speed	1800rpm		

Torque

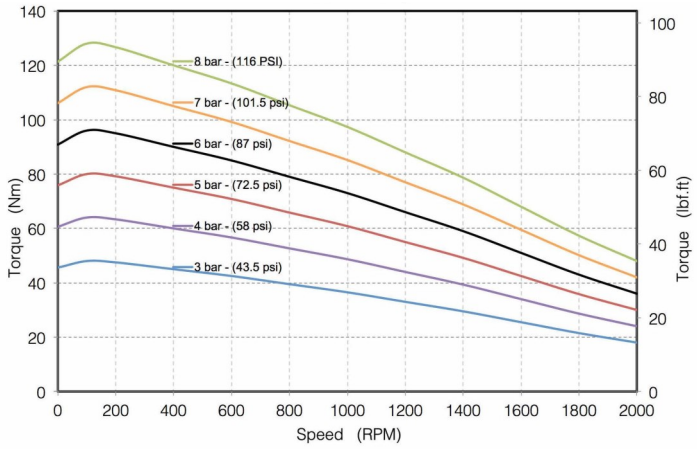

Power

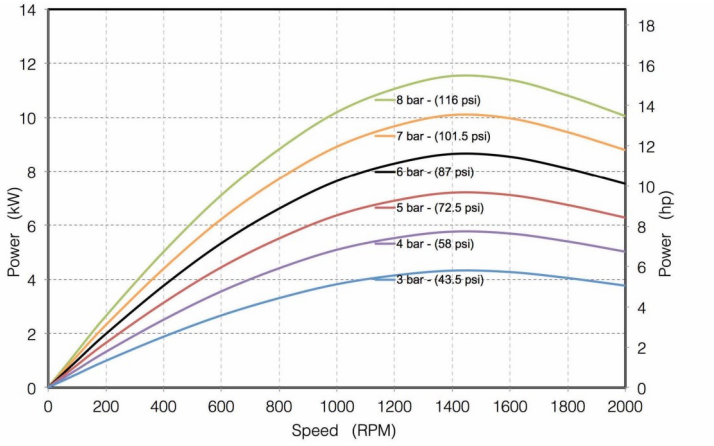

Air Consumption

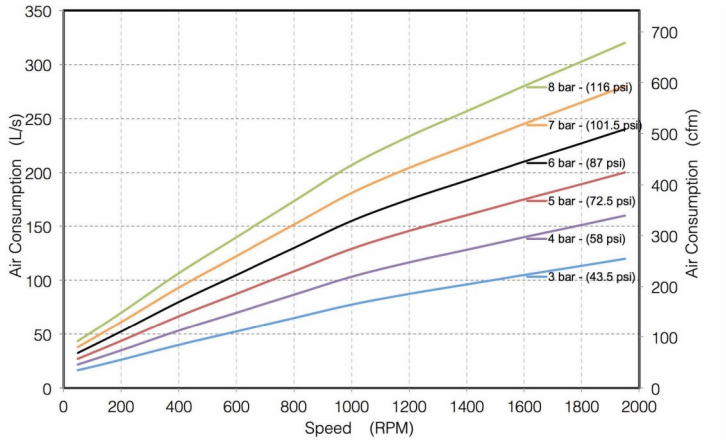

Performance specified including control valves and silencers

AGP07FA

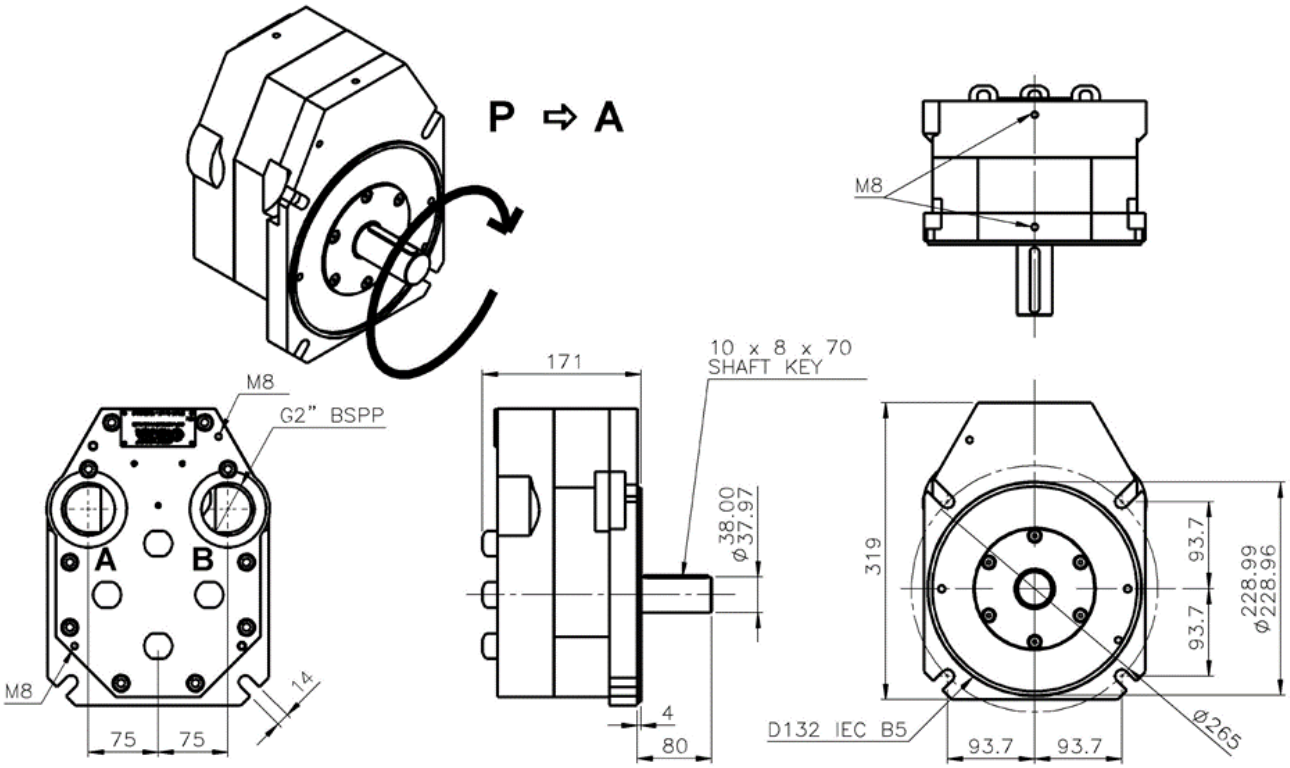

AGP310A

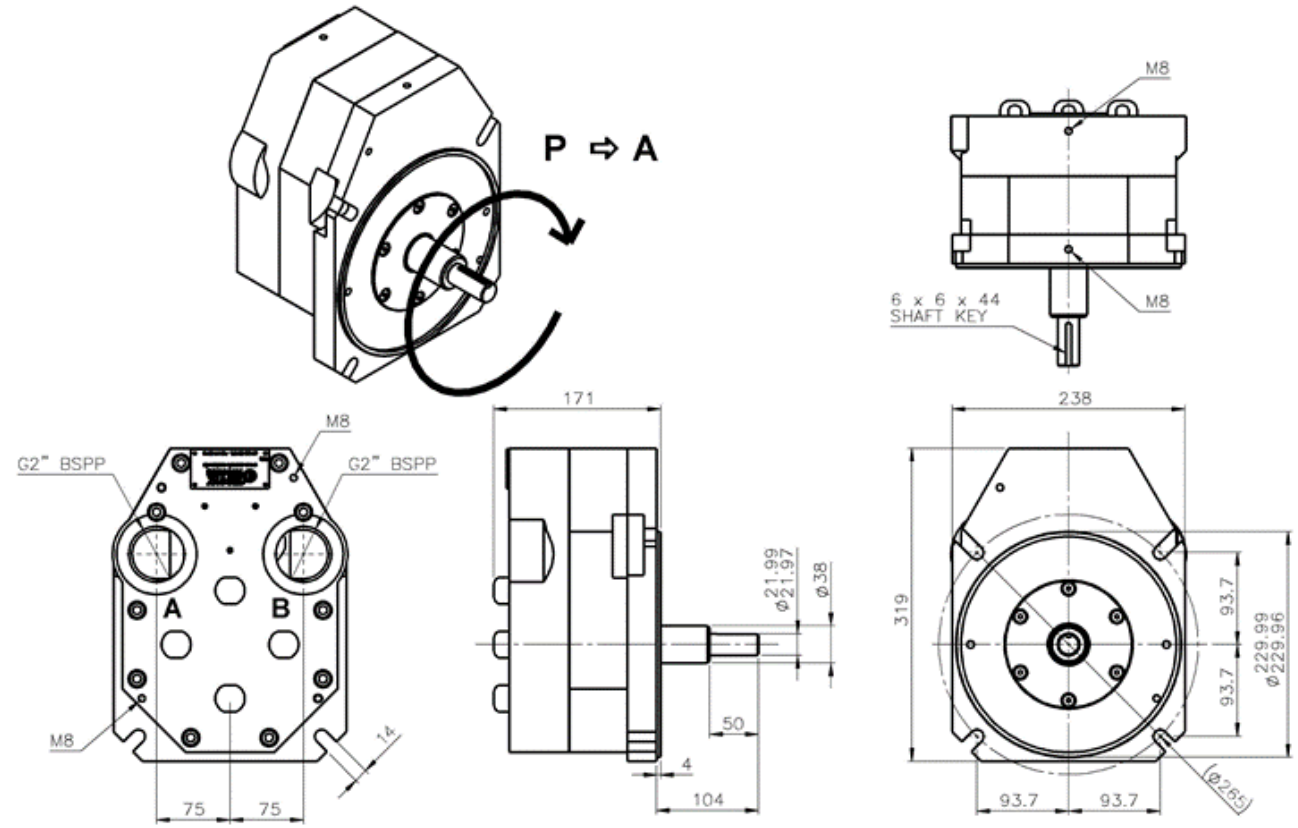

Armak Comparison

This Range of Armak motors are fully interchangeable with the radial piston design.

Below is a pictorial representation of the variance in the two designs and how much more compact the Armak GP range are.

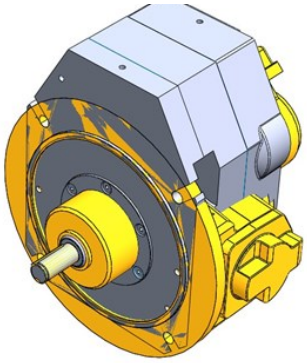

Armak Geared Piston Design

Radial Piston Design

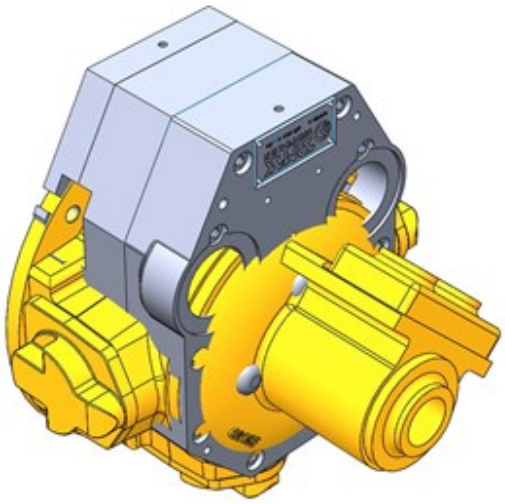

ARMAX MOTORS

1.8kW · 3.5kW · 7.3kW · 8kW · **11kW** · 16kW

AGP10/AGP410A Performance Data

Max Inlet Pressure	8bar	**Min. Speed**	75rpm
Air Line Connection	G 2” [BSPP]	**Operating Temp**	-10 / +80ºC
Mass	75kg	**Max. Air Inlet Temp**	65ºC
Max Power at 6bar	11kW	**Air Lubrication Short Run**	6-10 drops/min
Speed at 6bar (Max. Power)	1000rpm	**Air Lubrication Cont. Run**	3-4 drops/min
Torque at 6bar (Max. Power)	105Nm	**Radial Force Middle of Shaft**	10000N
Starting Torque at 6bar	110Nm	**Axial Force on Shaft**	100N
Max. Cont. Speed	1800rpm		

Torque

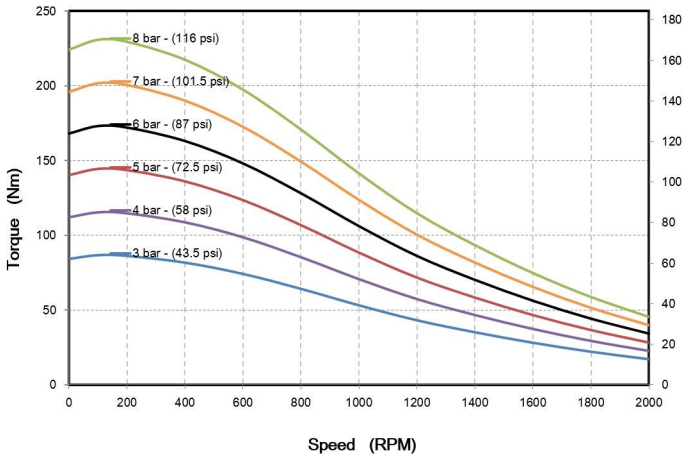

Power

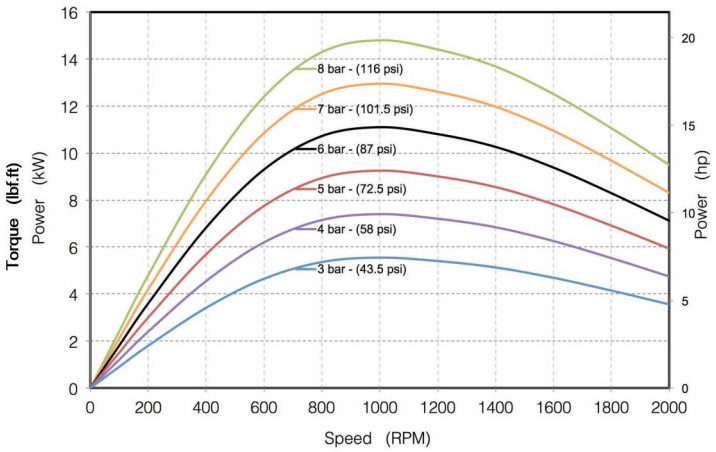

Air Consumption

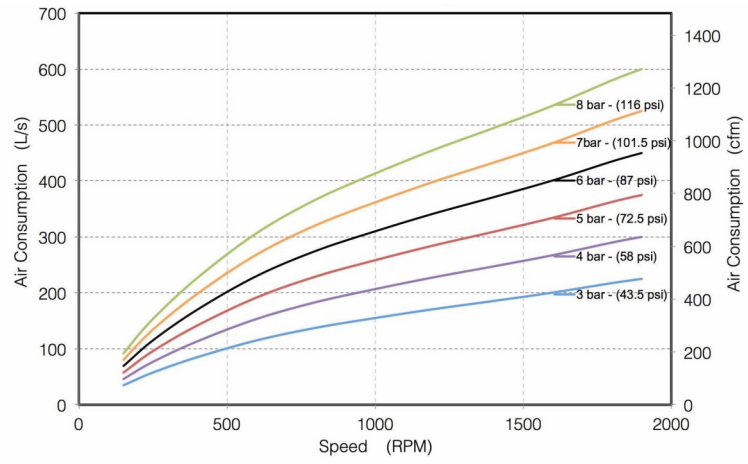

Performance specified including control valves and silencers

AGP10FA

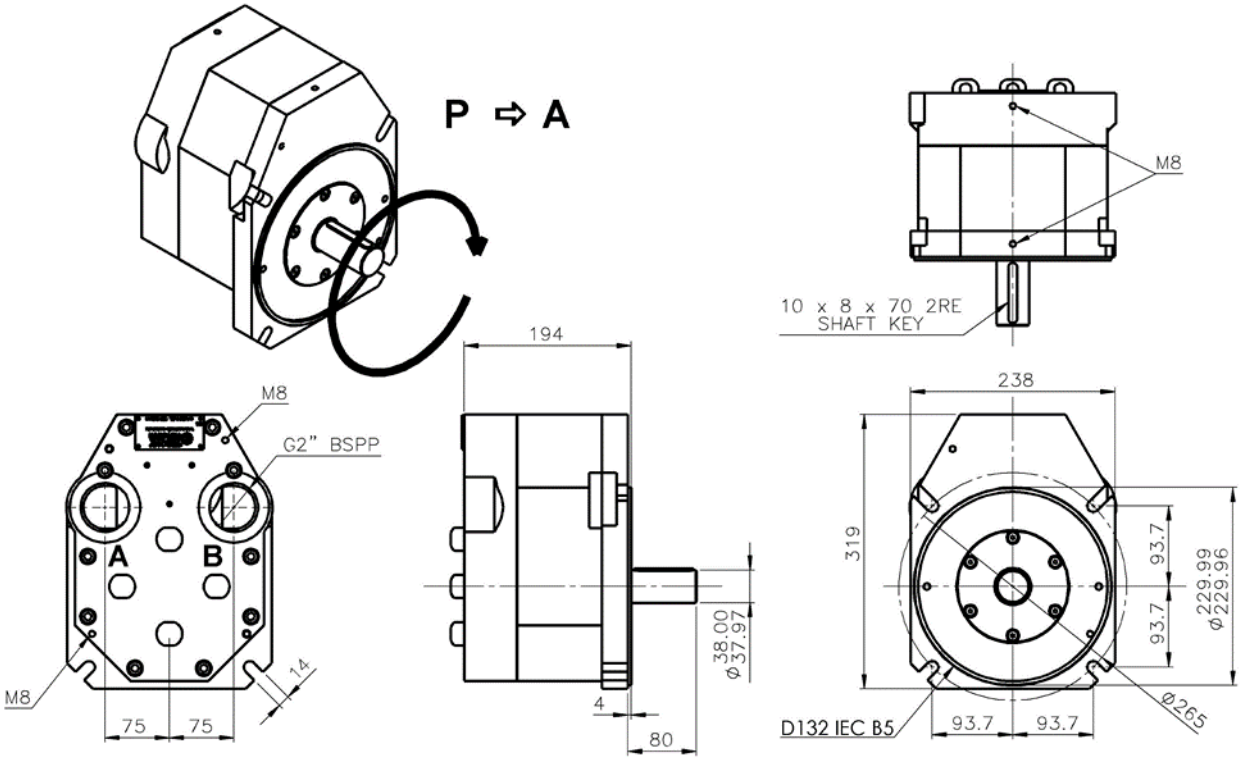

AGP10VA

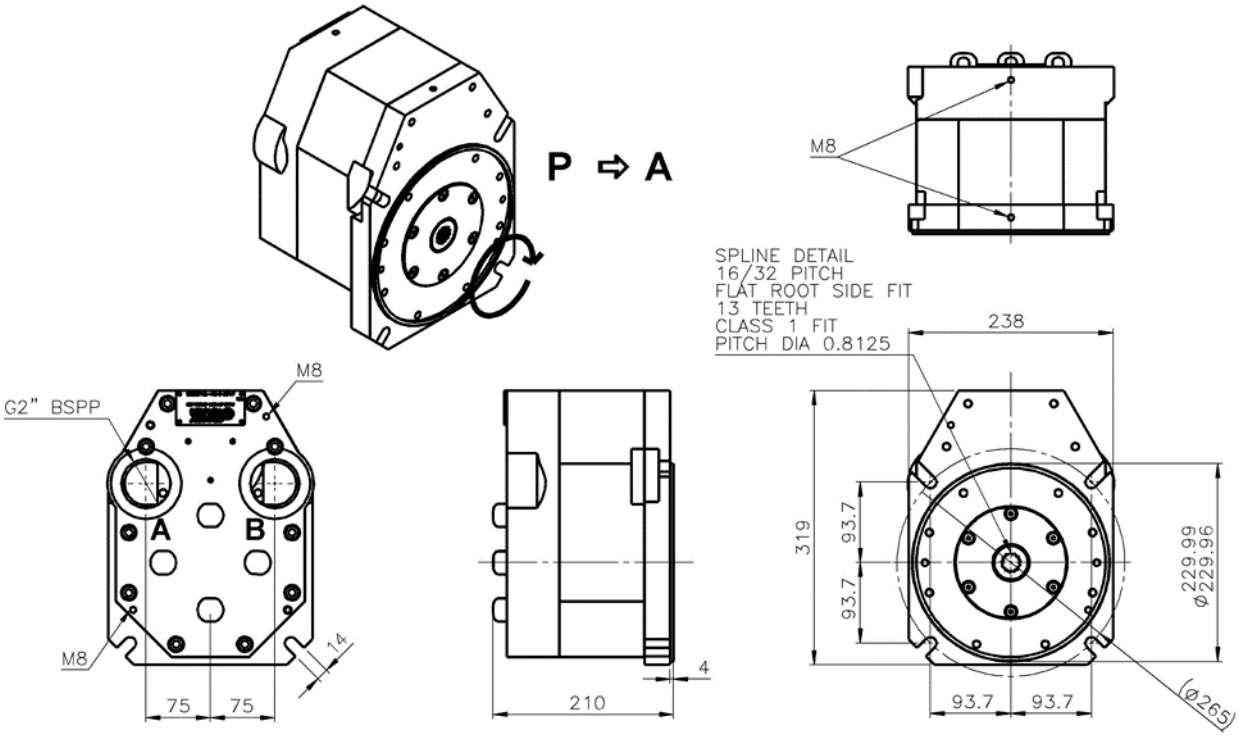

AGP410A

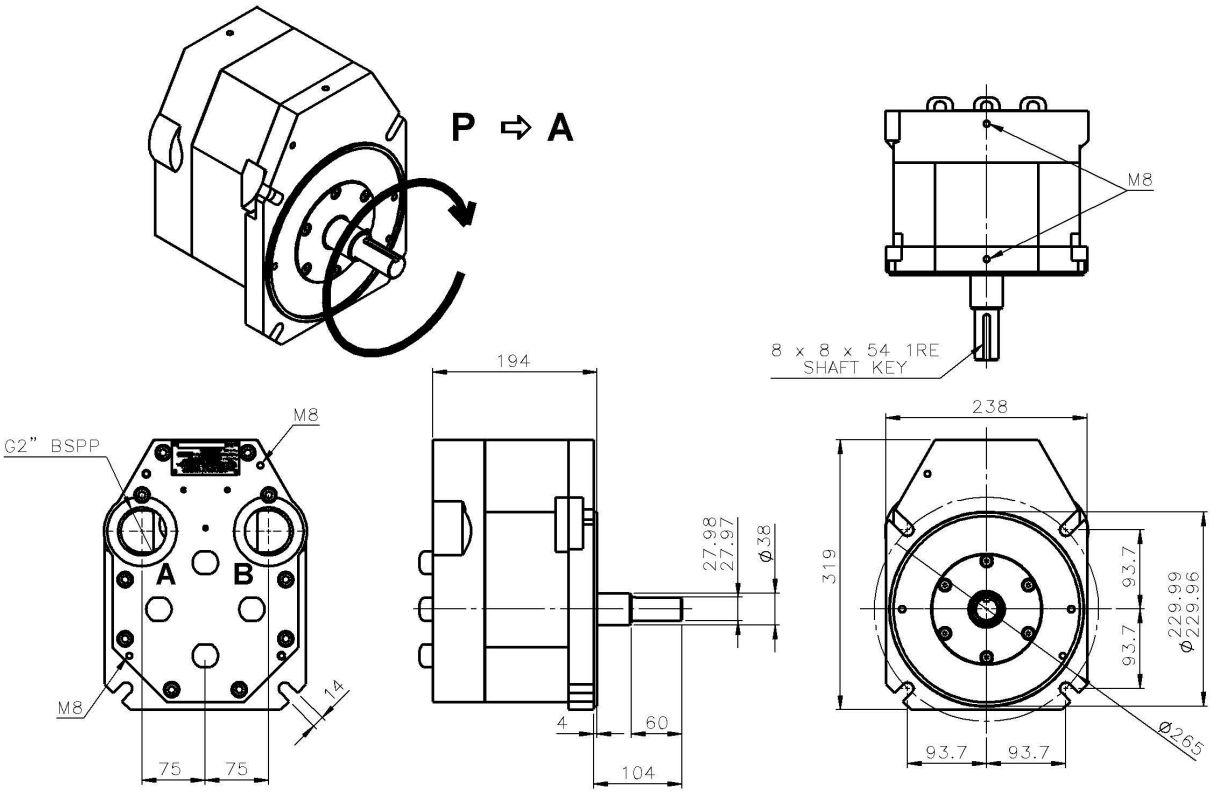

Armak Comparison

This Range of Armak motors are fully interchangeable with the radial piston design.

Below is a pictorial representation of the variance in the two designs and how much more compact the Armak GP range are.

Armak Geared Piston Design

Radial Piston Design

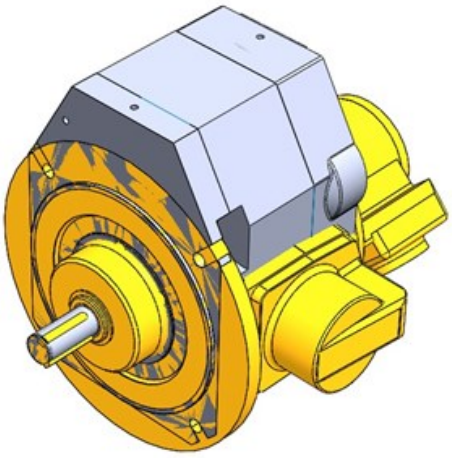

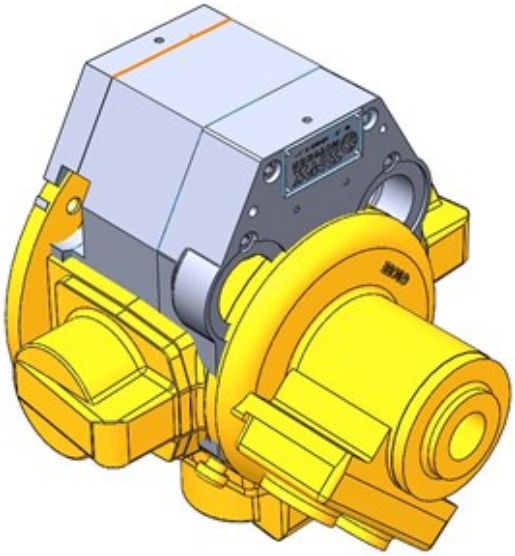

ARMAX MOTORS

1.8kW · 3.5kW · 7.3kW · 8kW · 11kW · **16kW**

AGP16/AGP510A Performance Data

Max Inlet Pressure	8bar	**Min. Speed**	75rpm
Air Line Connection	G 2” [BSPP]	**Operating Temp**	-10 / +80ºC
Mass	85kg	**Max. Air Inlet Temp**	65ºC
Max Power at 6bar	16kW	**Air Lubrication Short Run**	6-10 drops/min
Speed at 6bar (Max. Power)	1500rpm	**Air Lubrication Cont. Run**	3-4 drops/min
Torque at 6bar (Max. Power)	105Nm	**Radial Force Middle of Shaft**	10000N
Starting Torque at 6bar	110Nm	**Axial Force on Shaft**	100N
Max. Cont. Speed	1800rpm		

Torque

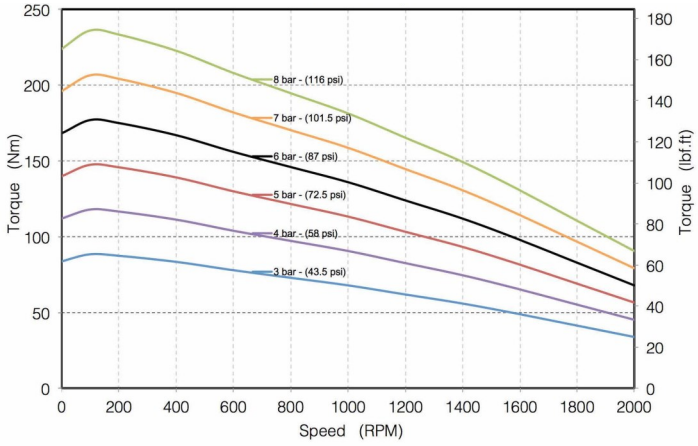

Power

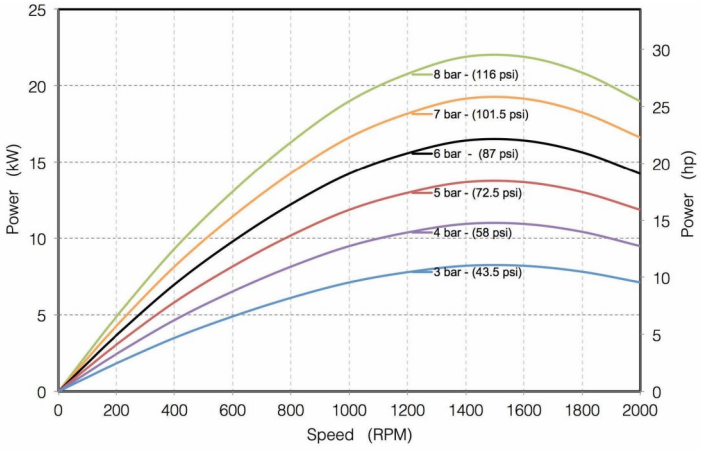

Air Consumption

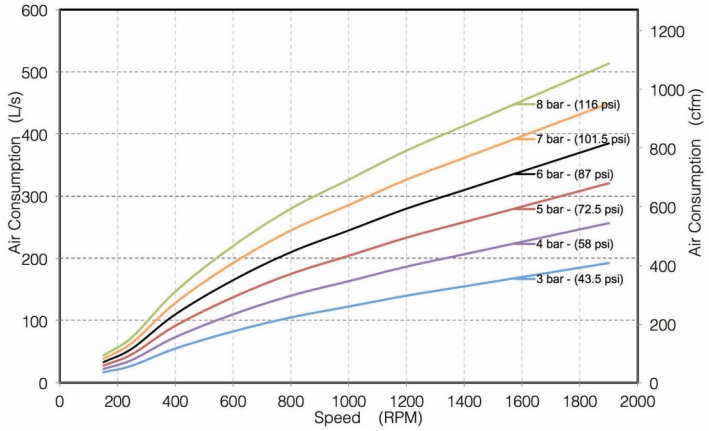

Performance specified including control valves and silencers

AGP16FA

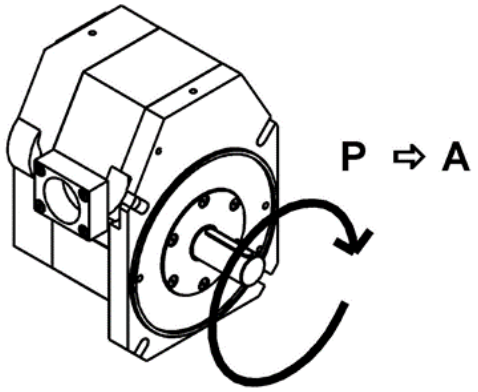

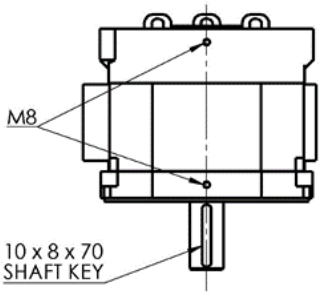

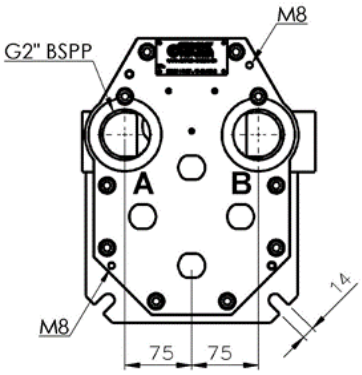

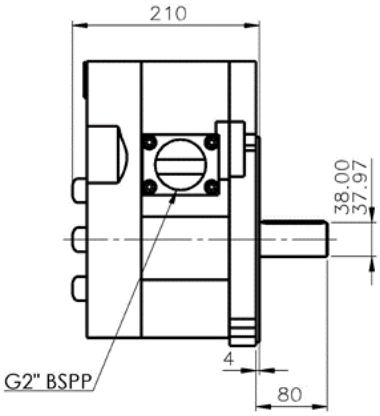

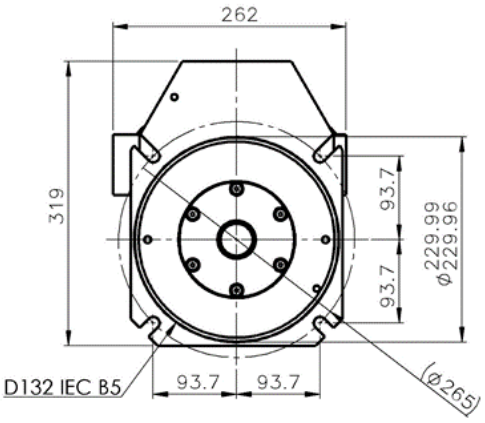

AGP16VA

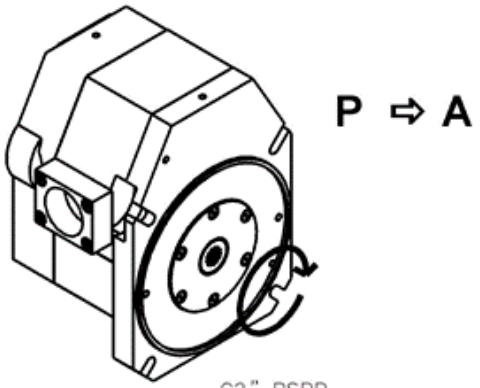

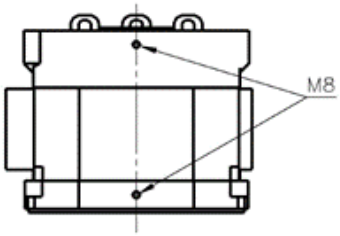

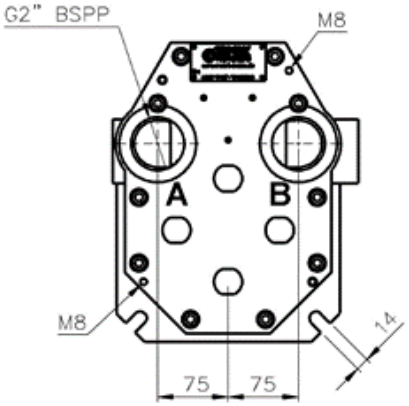

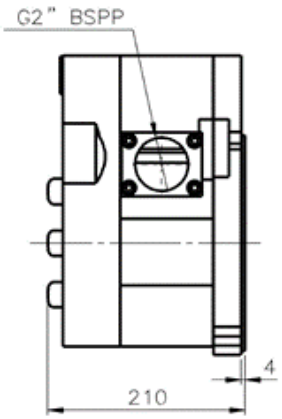

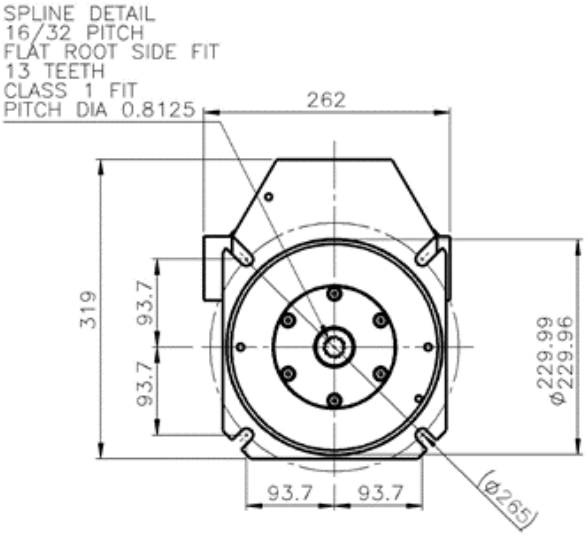

AGP510A

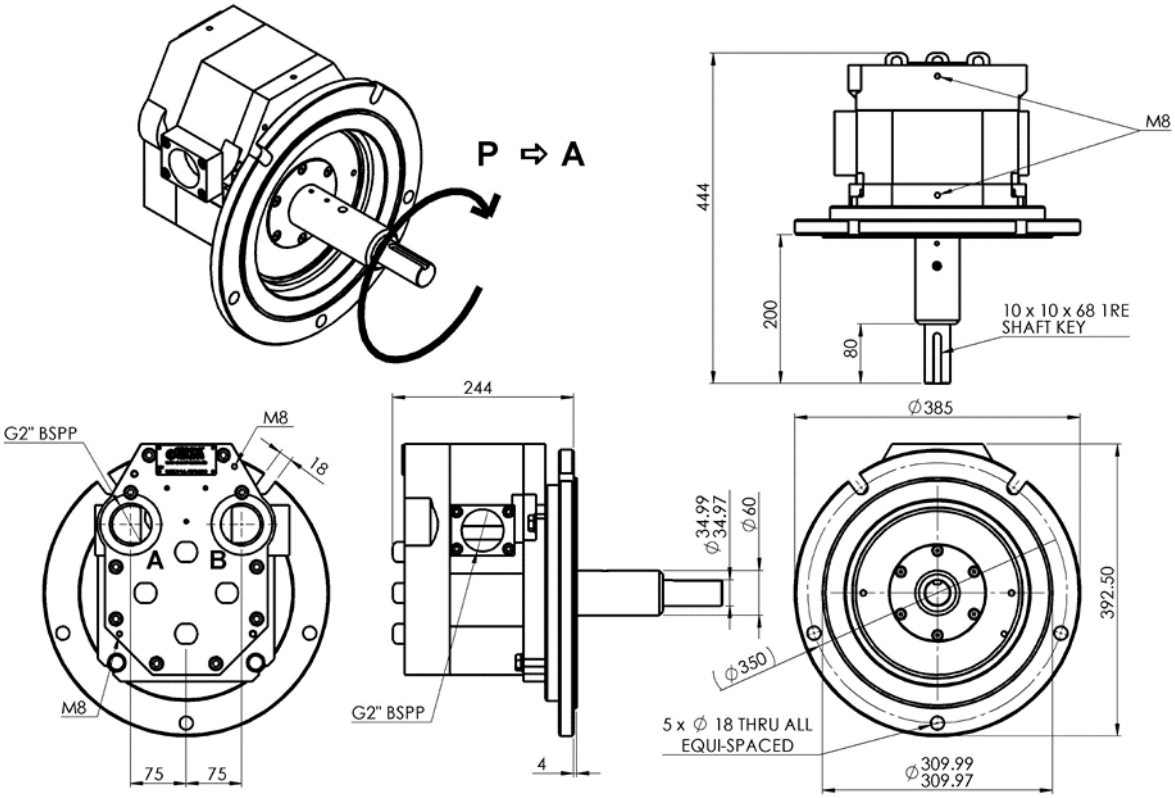

Armak Comparison

This Range of Armak motors are fully interchangeable with the radial piston design.

Below is a pictorial representation of the variance in the two designs and how much more compact the Armak GP range are.

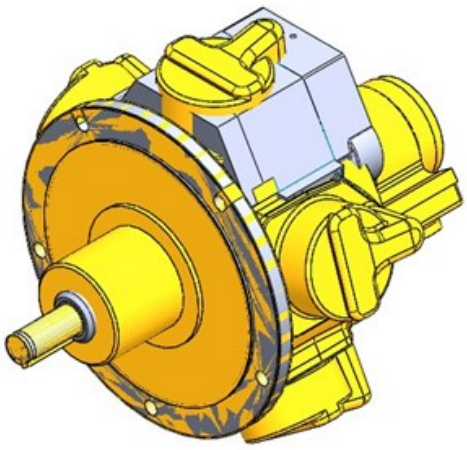

Armak Geared Piston Design

Radial Piston Design

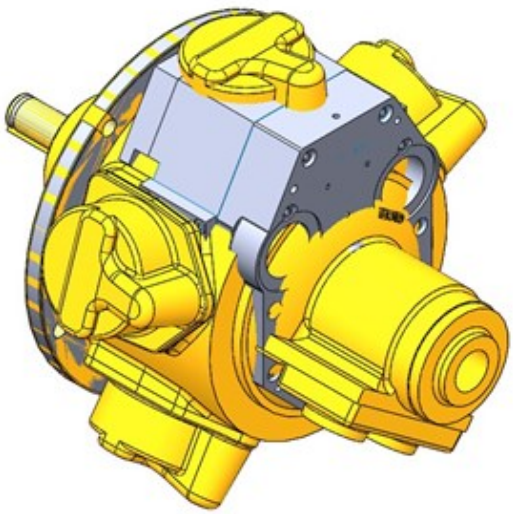

ARMAK CONTROL VALVES

DN16 · DN44 · LCV · RCV

A patented pressure balanced face valve producing infinitely proportional control of the Armak GP range of motors: actuated by hand, or remotely using proportional actuation valves.

This range is available in two sizes - DN16 & DN44

Upon selection of your motor, these are both configurable to meet the control and produce minimal restriction, thereby achieving the performance throughout the GP range of motors.

Fitting of the Armak specified valves and silencers will ensure that the published performance data is achieved.

RCV

Remote Control Valve

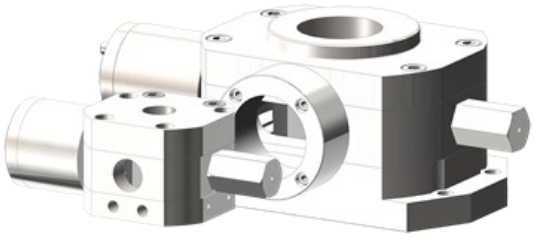

LCV

Lever Control Valve



To use with:

These Control Valves will work with the following motor sizes.

- DN16 - 1.8kW & 4kW GP motors
- DN44 - 7kW, 10kW, 16kW GP Motors

AGP01 AGP04

DN16 - LCV

Lever Control Valve

Suitable Valve Configurations for motors.

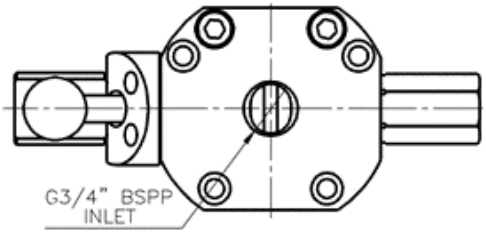

AGP01	LCV01J LCV01K LCV01L
AGP04	LCV04J LCV04K LCV04L
AGP06	LCV06M LCV06N

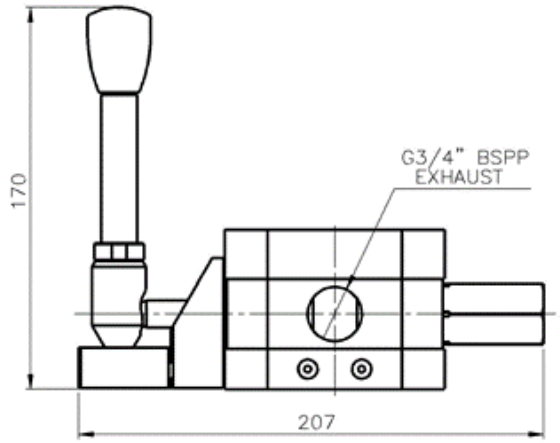

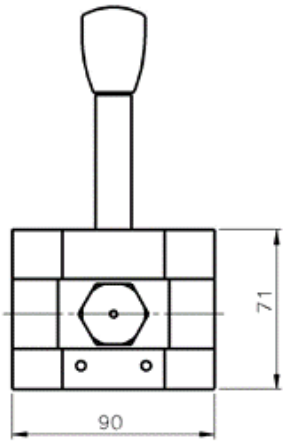

DN16 - RCV

Remote Control Valve

Suitable Valve Configurations for motors.

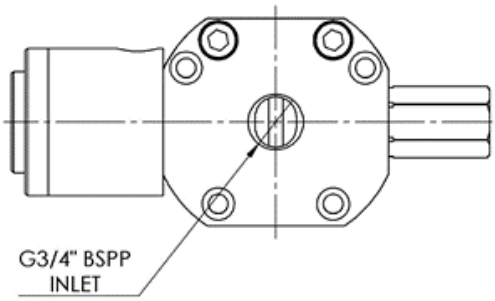

AGP01	RCV01R RCV01V RCV01W
AGP04	RCV04R RCV04V RCV04W
AGP06	RCV06S RCV06T

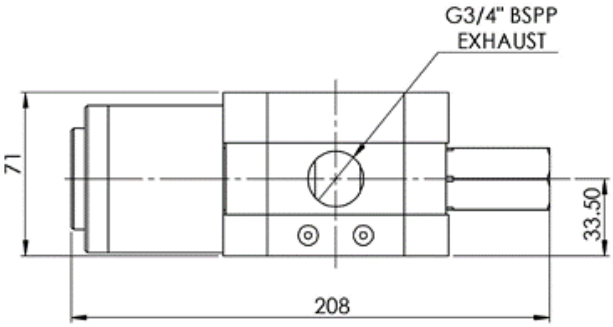

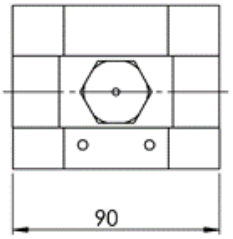

AGP07 AGP10 AGP16

DN44 - LCV

Lever Control Valve

Suitable Valve Configurations for motors.

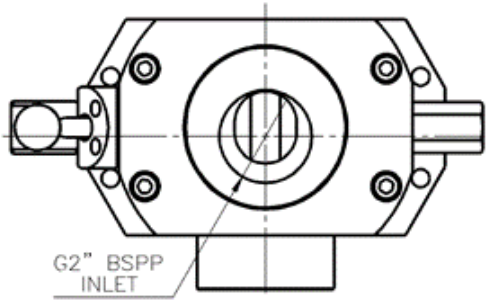

AGP07
AGP10
LCV10J
LCV10K
LCV10L

AGP16
LCV16M
LCV16M-CP
LCV16N
LCV16N-CP

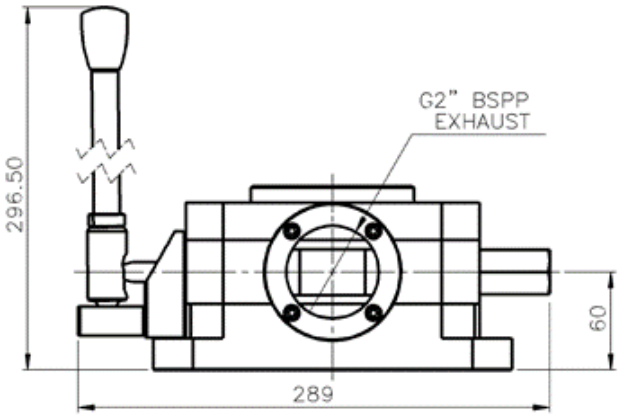

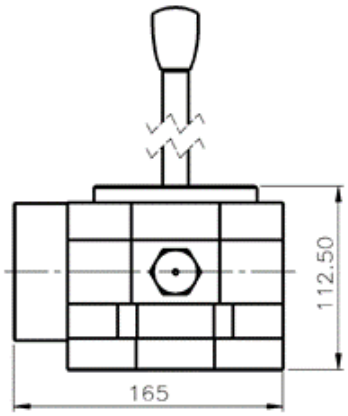

DN44 - RCV

Remote Control Valve

Suitable Valve Configurations for motors.

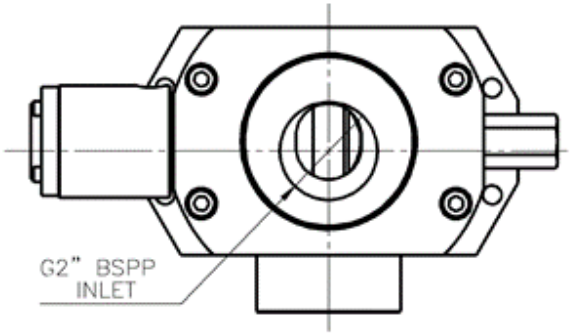

AGP07
AGP10
RCV10R
RCV10V
RCV10W

AGP16
RCV16S
RCV16S-CP
RCV16T
RCV16T-CP

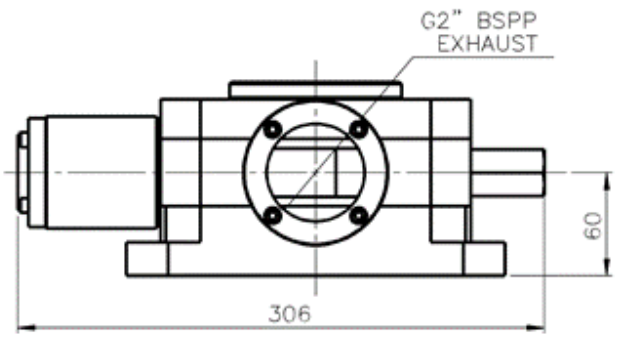

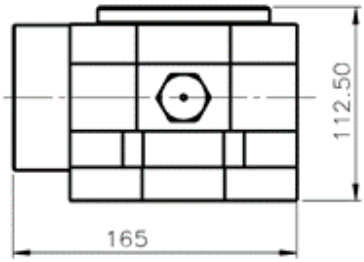

Bias in the control valves (i.e. exhaust restriction) is achieved on the larger valves by fitting an additional "check plate" (CP) into the return line within the lowering port. The restriction is application dependent and must be sized on installation, simply achieved by sizing the orifice in the check plate. The check plate also ensures a minimum operating pressure for release control of the brake assembly. The check plate does not affect the operating power of the motor in the opposite maximum power direction.

On the AGP07 to AGP16 motors an additional exhaust valve is fitted to ensure minimum restriction, this guarantees maximum power will be achieved by the motor. The power valve is actuated by the pilot actuator mounted on the directional valve. The additional exhaust only opens when the main directional valve is requesting higher power. This feature ensures micro flow control on initial opening of the valve without affecting the higher power performance of the motor.

The direction of rotation in which the maximum power is required (Clockwise CW or Anti Clockwise ACW when viewed on shaft) must be specified on order. This dictates the position of the power valve.

Handle Orientation

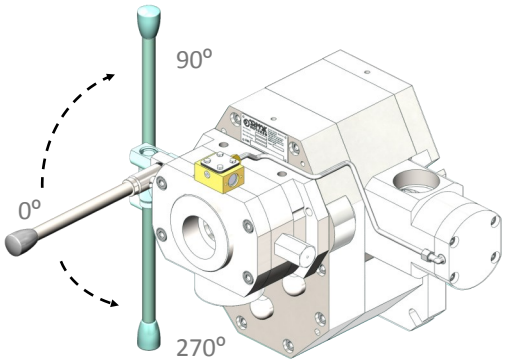

Power Valve Configurations

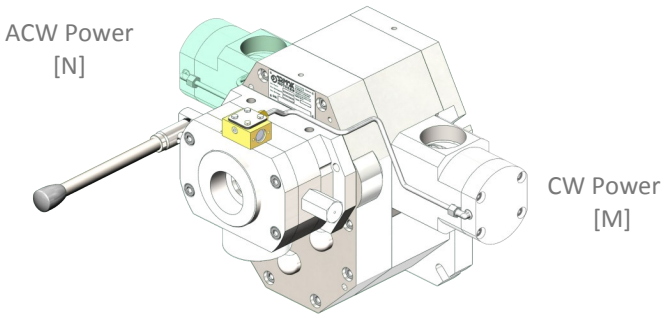

To assist in obtaining the correct configuration on installation the control lever can be rotated 360° in 90° steps, this ensures an appropriate actuation position is achieved. To meet ergonomic requirements a reverse handle assembly can also be supplied. Lever adjustment can be made during final installation of the valve.

ARMAX ACCESSORIES

Power Valve for operations on GP16

To ensure that the proportional valve gives excellent control under minimal flow requirements, the valves are sized for such performance. This however, can lead to a restriction in the exhaust minimising the efficiency and motor power output. The power valve is designed to minimise back/exhaust pressure on the geared piston motor. The valve is designed to ensure high power is available when it is required. At 60% of the proportional valves stroke, the pilot valve **213 -001** will signal the power valve to open additional exhaust ports. Exhausts can be fitted in either or both additional exhaust ports dependant on the maximum power requirements. The power valve also offers an internal adjustable stop that can be set to prevent over speeding for when the motor is operating off load.

The power valve is positioned on the exhaust side for the power direction required. This must be specified when ordering the motor. A dual power valve to give maximum power in both directions is also available but its performance in the opposite direction will be as per the AGP10 performance. See data sheet.

An example of a typical AGP16 complete assembly

AGP16FRCPSK

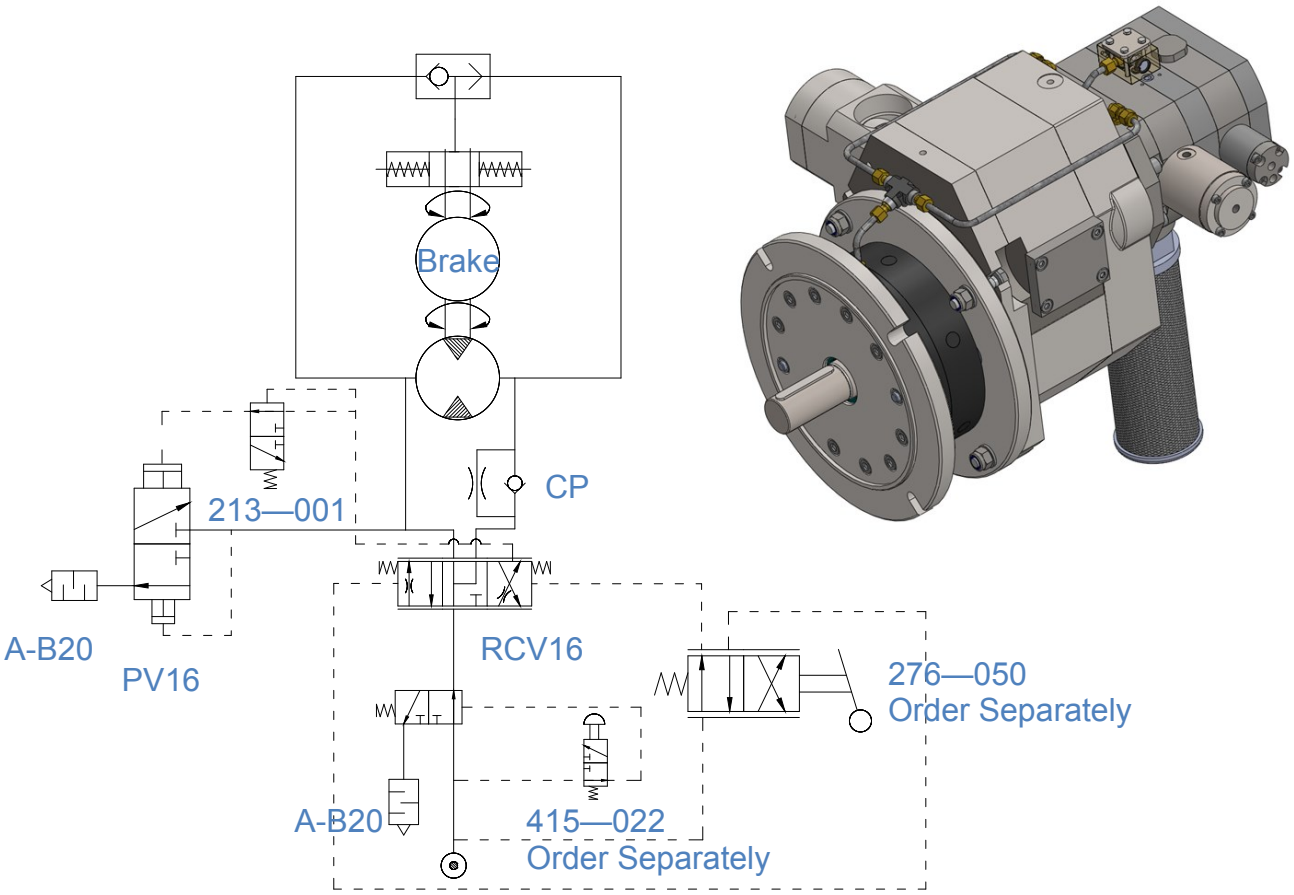

ARMAX ACCESSORIES

Power Valve for operations on GP16

213-001

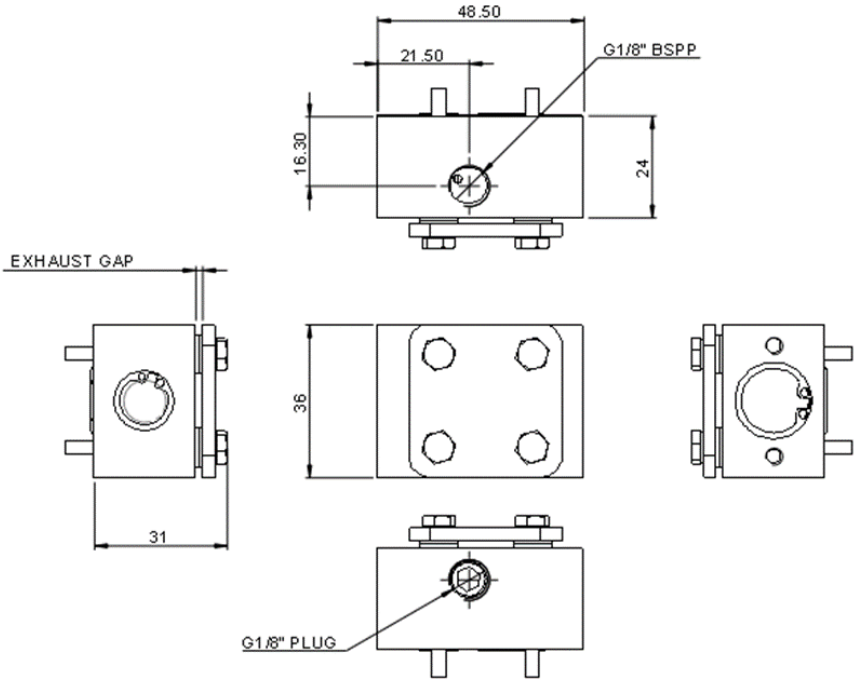

Pilot valve fitted to LCV and RCV 16 proportional valves for power valve actuation

PV16

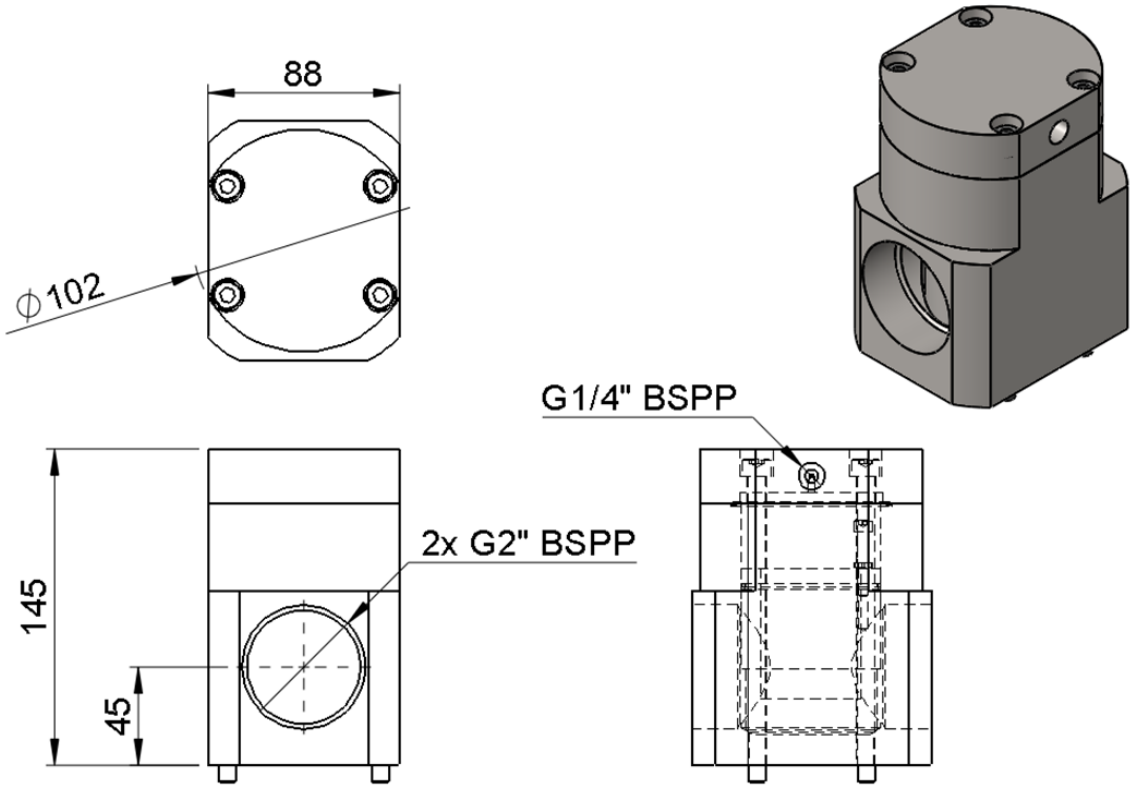

ARMAX ACCESSORIES

Power Valve for operations on GP06

PV06

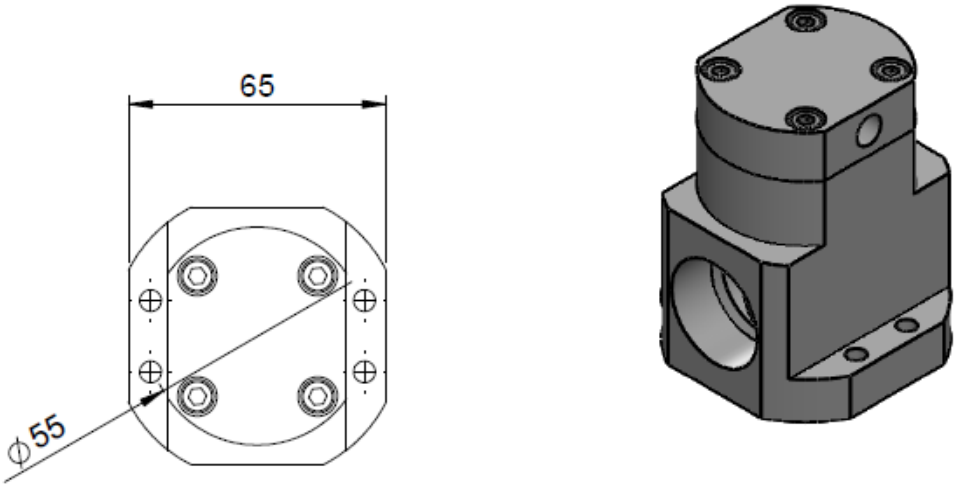

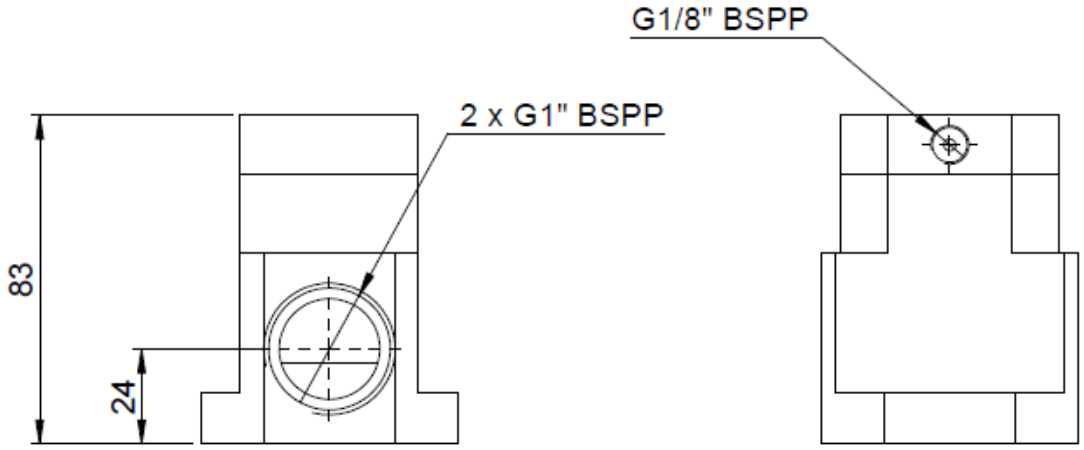

ARMAK ACCESSORIES

Shut off Valve for AGP07/AGP10/AGP16

To meet with the new EU machineries legislation, emergency valves have been designed to completely close the air feeds to the motor, while at the same time venting the downstream pressure, thereby removing all stored pneumatic energy. The shut—off valve must be used in conjunction with either LCV or RCV proportional valve. The valves must be ordered as an assembly at the order stage. The shut—off valve is available in three types:

- **Style E**— Shut off with integral E-stop— Normally used in conjunction with LCV proportional.

LCV16M—E

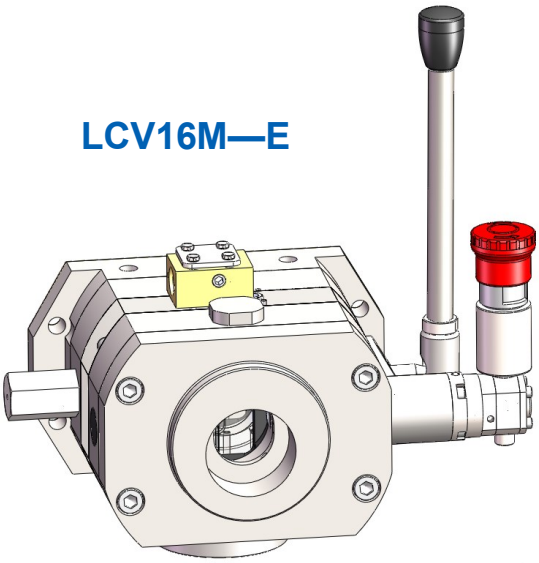

AGP16FMCPE

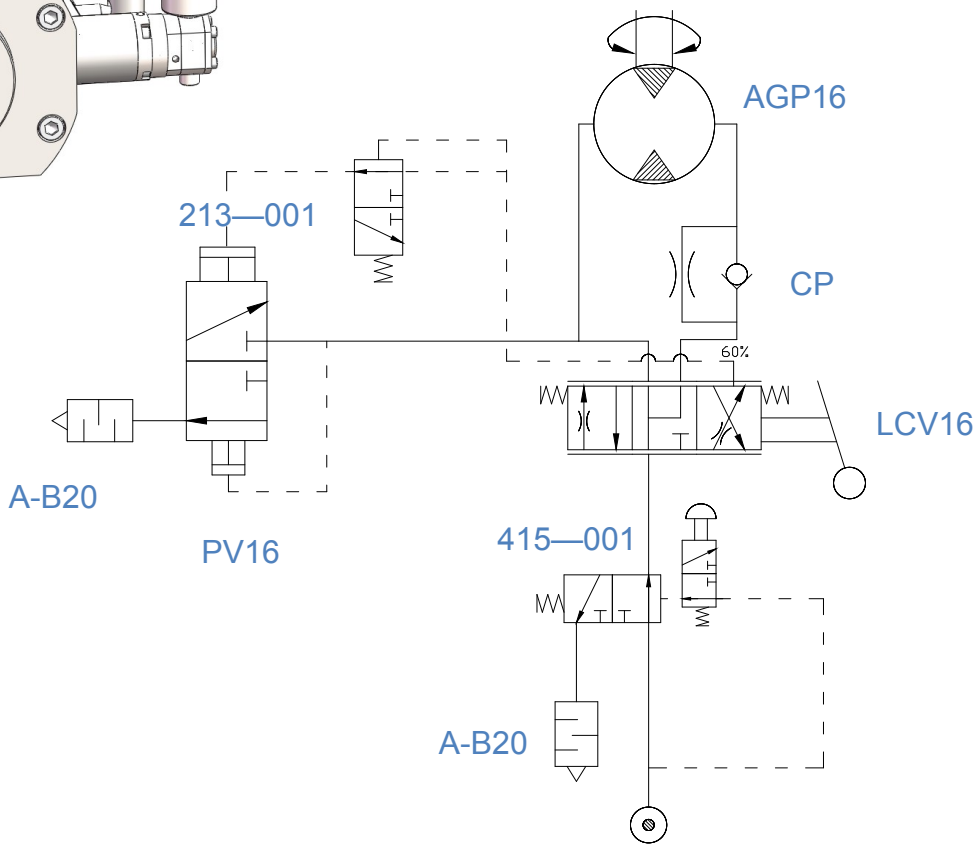

Please note Assembly's can be either RCV or LCV

- **Style R**— With the remote stop mounted in conjunction with the pilot lever proportional valve. See accessory 276-050 pilot lever proportional valve for marine environments.

415—022

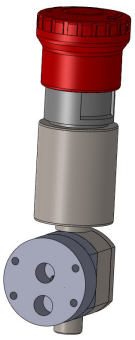

276—050



RCV16S—R

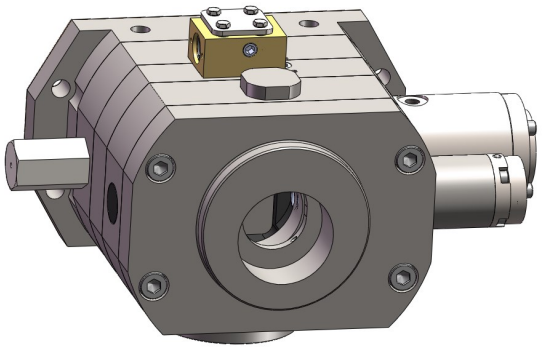

AGP16SR

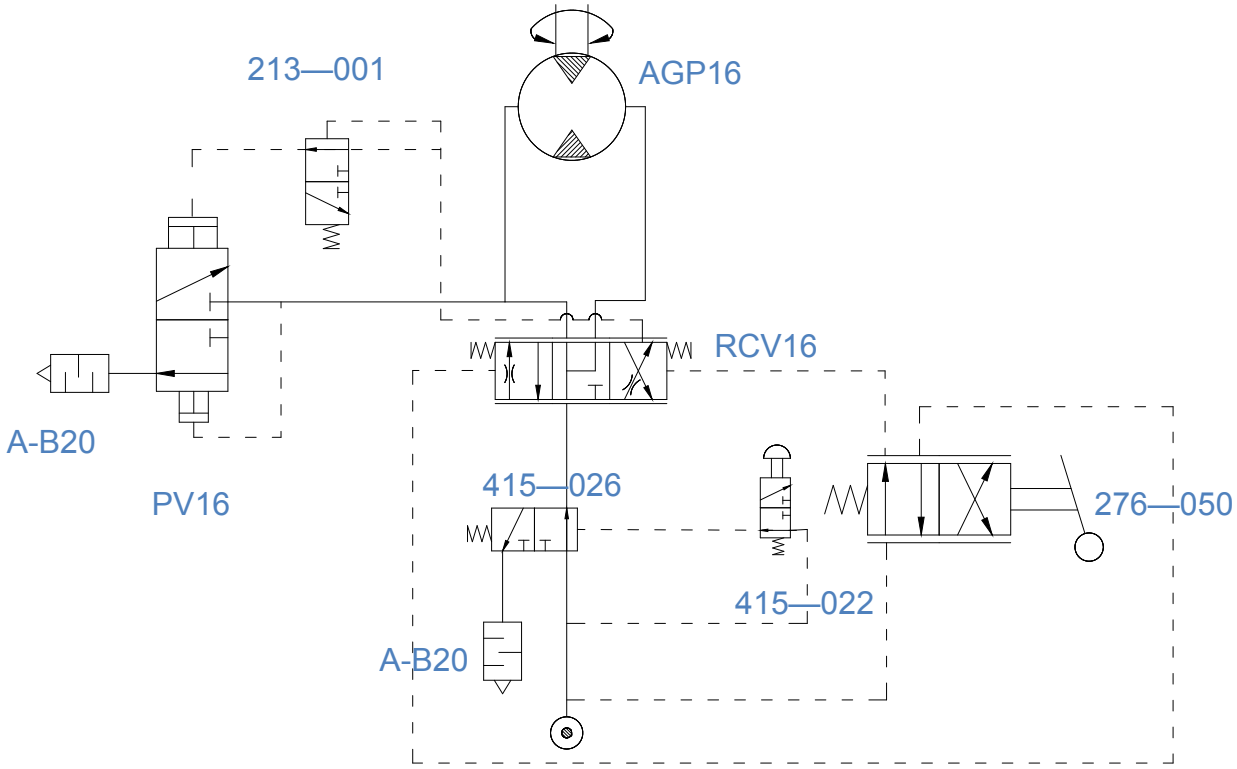

Please note Assembly's can be either RCV or LCV

- **Style S**— Shut off only— for external circuit actuation or interlock

RCV16S—S

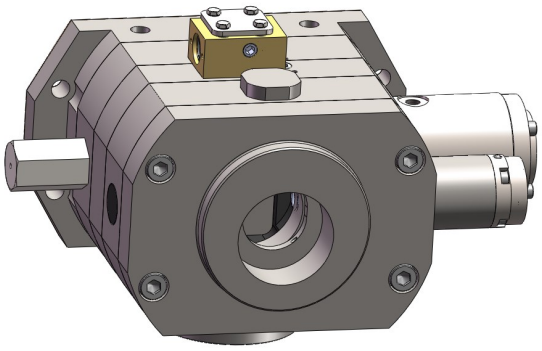

AGP16SCPS

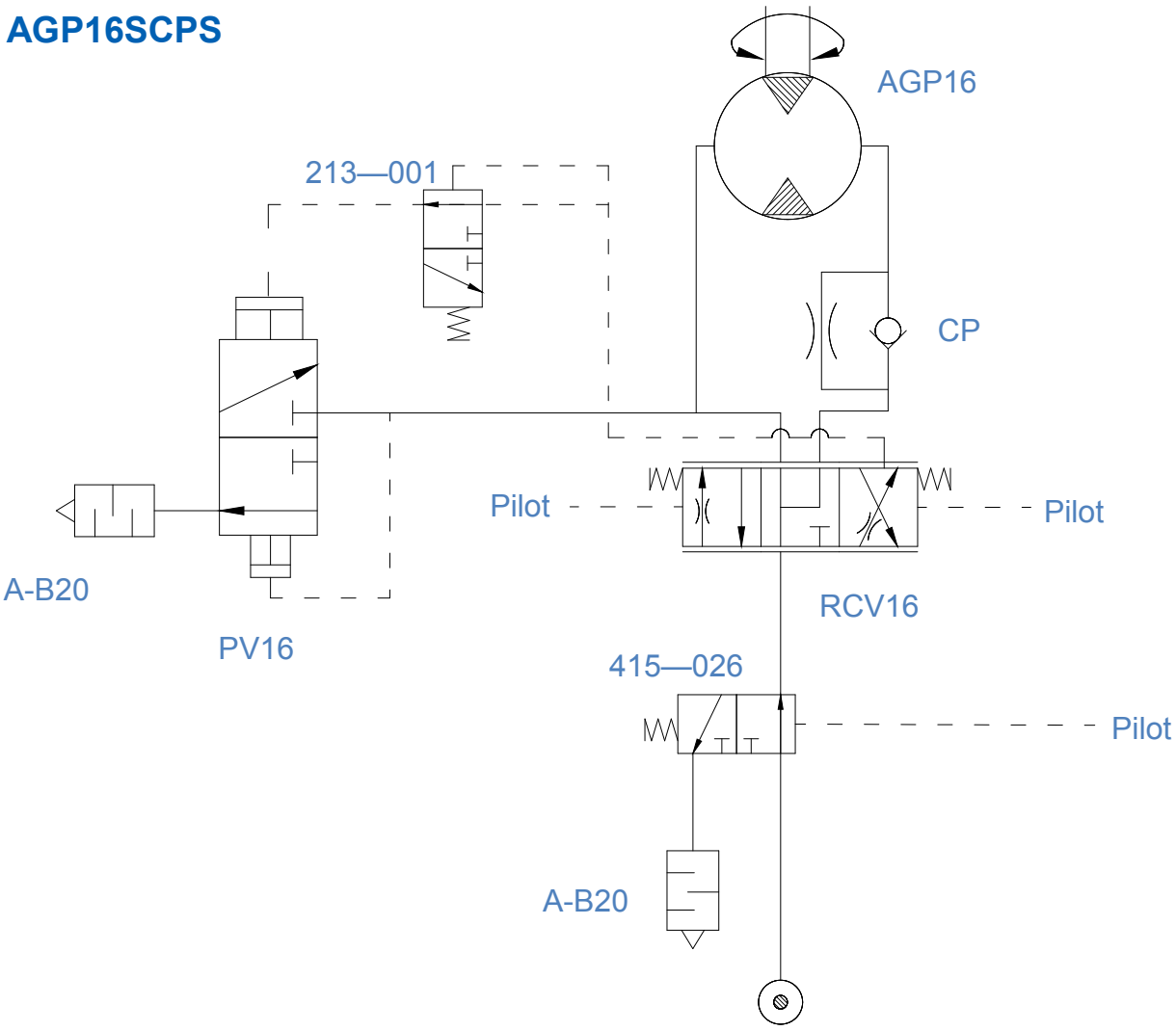

Please note Assembly's can be either RCV or LCV

ACCESSORIES

Shut off Valve for AGP07/AGP10/AGP16

415-026

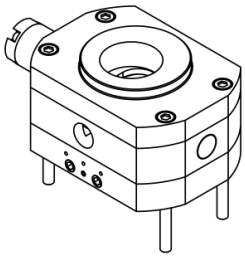

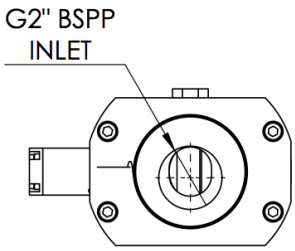

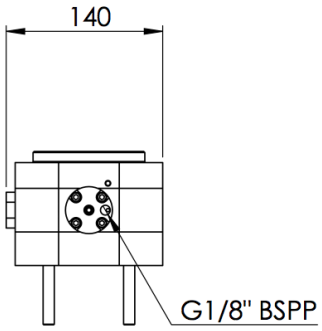

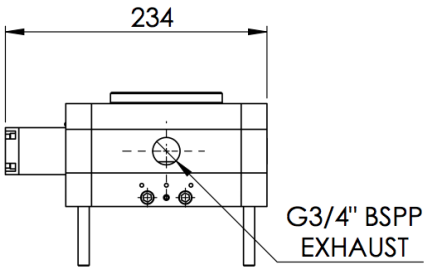

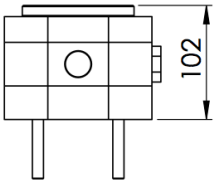

415-001

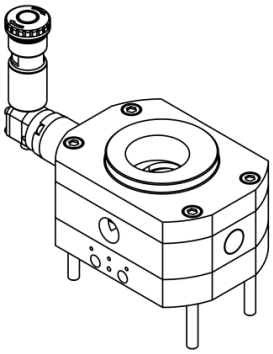

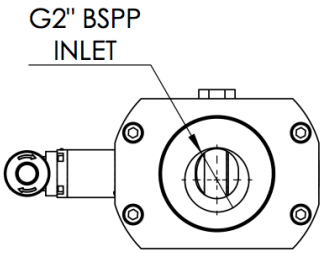

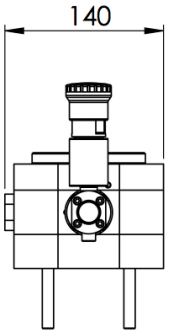

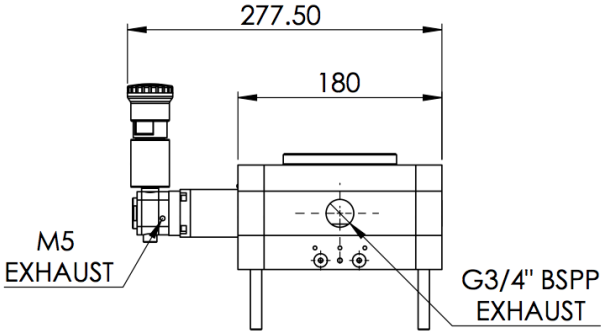

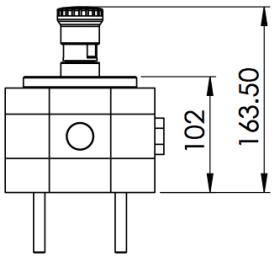

ARMAK ACCESSORIES

Shut off Valve for AGP01/AGP02/AGP04/AGP06

576-010

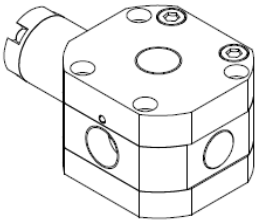

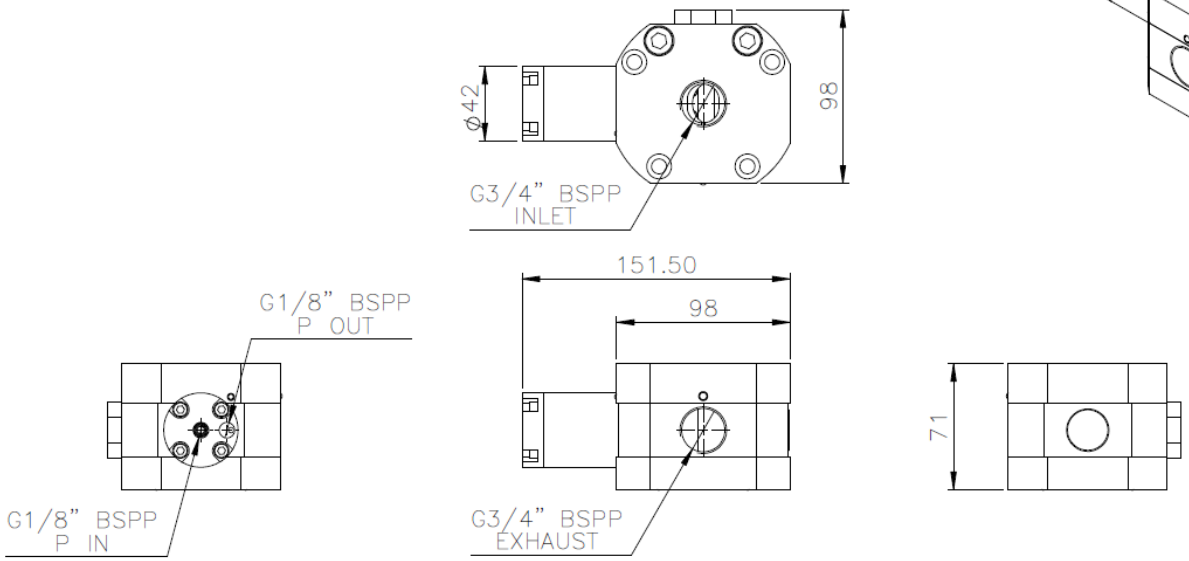

576-001

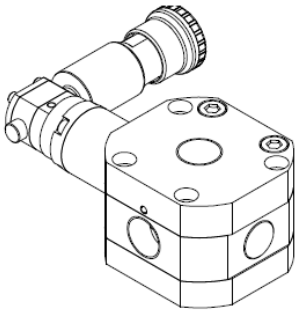

ARMAX ACCESSORIES

Silencer

The standard provides up to 85% perceived noise reduction and 94% flow factor

- Expertly reduces Exponentially Perceived Noise (EPNdB) without impeding equipment performance
- Designed to take explosive air exhaust noise discharged from valve exhaust ports and muffle it with optimized Constant Velocity (CV) flow factor
- Exhaust air flows softly to atmosphere, free of noise, oil fog, and other contaminants – helping to maintain a clean, comfortable and productive work environment
- Features a unique obstruction-free expansion chamber, with corrosion-resistant aluminium end covers, zinc-plated steel components and a cellulose fibre element
- recommended for general purpose air exhaust applications for pressures up to 125 psi (8.6 Bar)

Single Chamber-Male

3/4”- 2"

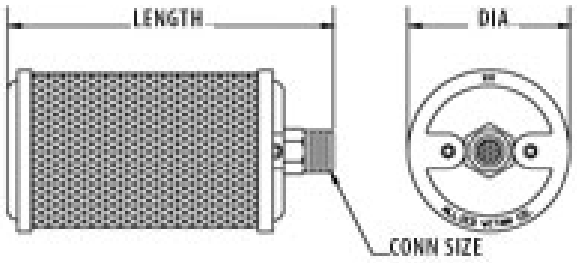

Conn Size	Male BSPT		Diameter	Length		Replacement element
	Model Type	Item number		Male	Female	
3/4”	A-B07	0121007	3.40	7.18	6.68	0911007
2”	A-B20	0121020	5.25	18.87	17.75	0911020

ARMAX ACCESSORIES

Filter Regulator Lubricator

A standard range (3/4—2”) of filter regulator lubricators are available.



ARMAK BRAKES

Precise operation and tough construction of the steel/organic lining friction combination characterise these brakes. In addition an emergency release facility can be fitted to enable the brake to be released should the compressed air supply fail.

These spring-applied fail safe brakes are released with compressed air which is fed into the stationary cylinder.

The design of the brake is intended as a parking brake only and not for dynamic braking. The unique Armak control valve option allows braking of a lowering load by pneumatic action only to a full stop for a short period of time, long enough to enable the use of a static brake.

The minimum motor operating pressure must be set to ensure that when the motor is free running the brake is fully released. The check plate can be sized to achieve the minimum operating conditions, giving system dynamic braking but with fail safe actuation of the parking brake.

AGP01 AGP02 AGP04 AGP06 Brakes

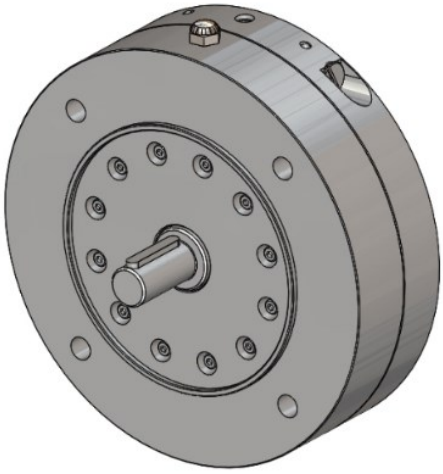

Specification

Standard Torque Range	From 33 to 56Nm
Release Pressure	See graph
Frame & Flange	IEC Frame B5 D80 Flange

To use with:

This brake is ideal to use with the AGP01, AGP02, AGP04 & AGP06 motors in general mechanical engineering.

Please note to use the brakes the B style motor D080 output must be used.

AGP01 AGP02 AGP04 AGP06 Brakes

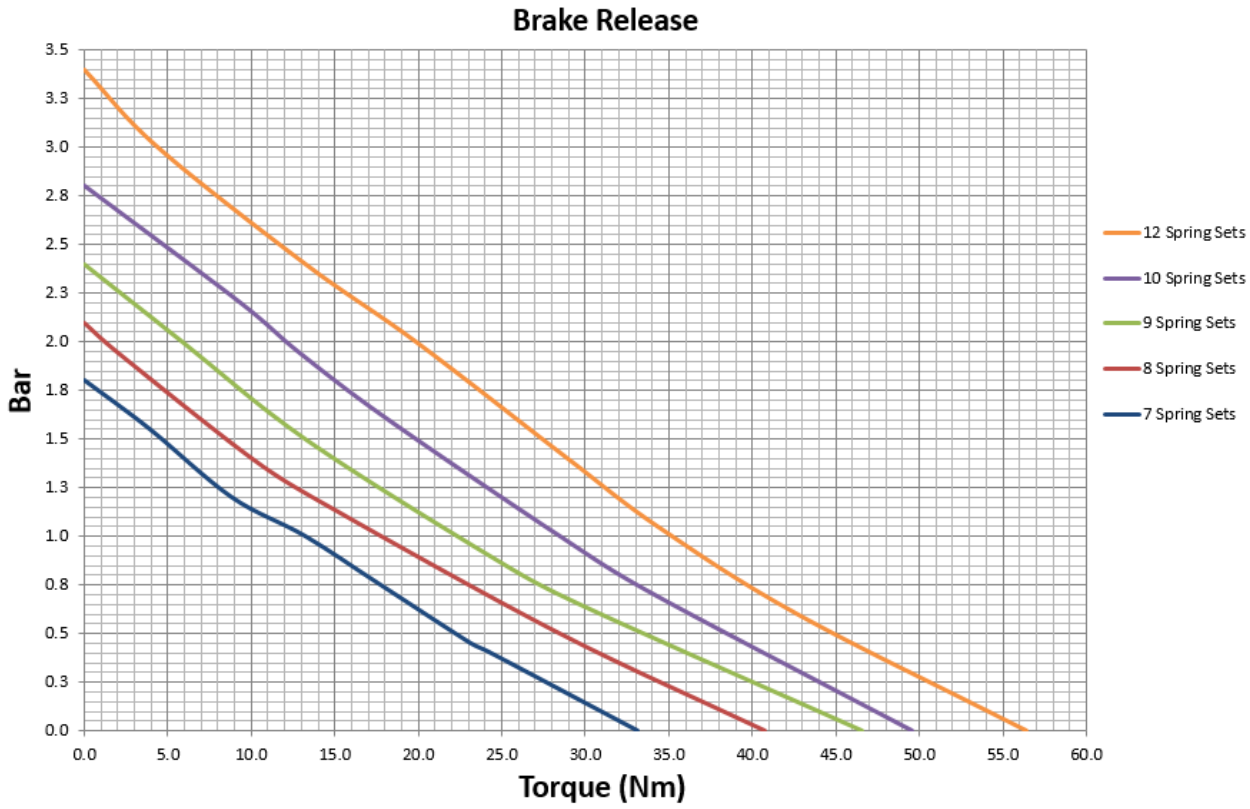

Part Number	Torque (Nm)	Release Pressure (Bar)	Number of Springs
547-001	56	3.4	12
547-047	49	2.8	10
547-048	46	2.4	9
547-049	40	2.1	8
547-050	33	1.8	7

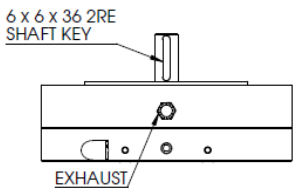

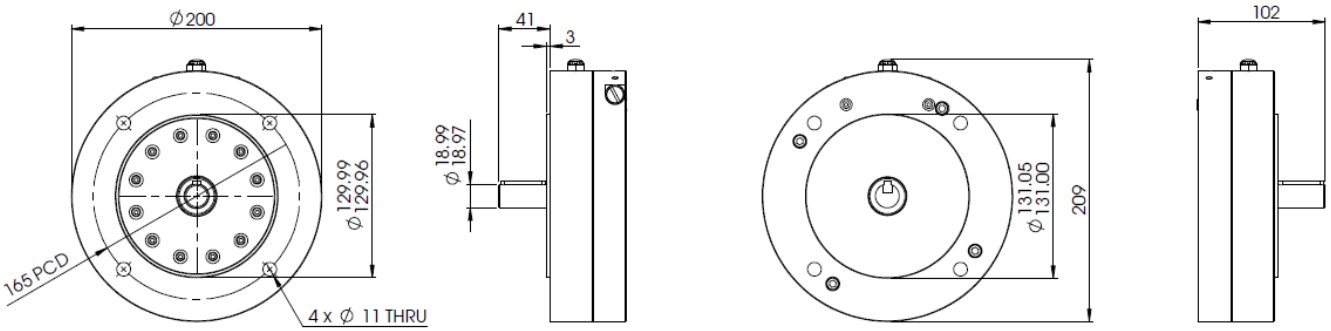

AGP07 AGP10 AGP16 Brakes

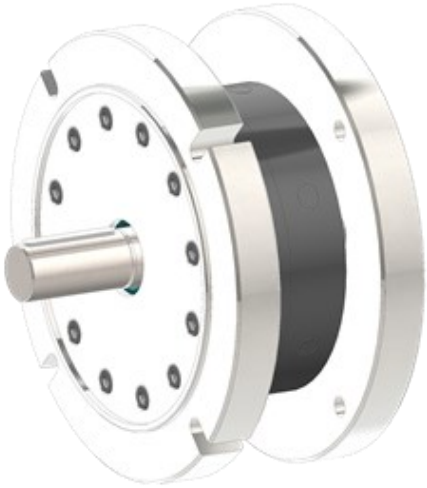

Specification

Standard Torque Range	From 130 to 290Nm
Release Pressure	See graph
Frame & Flange	IEC Frame B5 D132 Flange

To use with:

This brake is ideal to use with the AGP07, AGP10 & AGP16 motors in general mechanical engineering.

Please note to use the brakes the F style motor D132 output must be used.

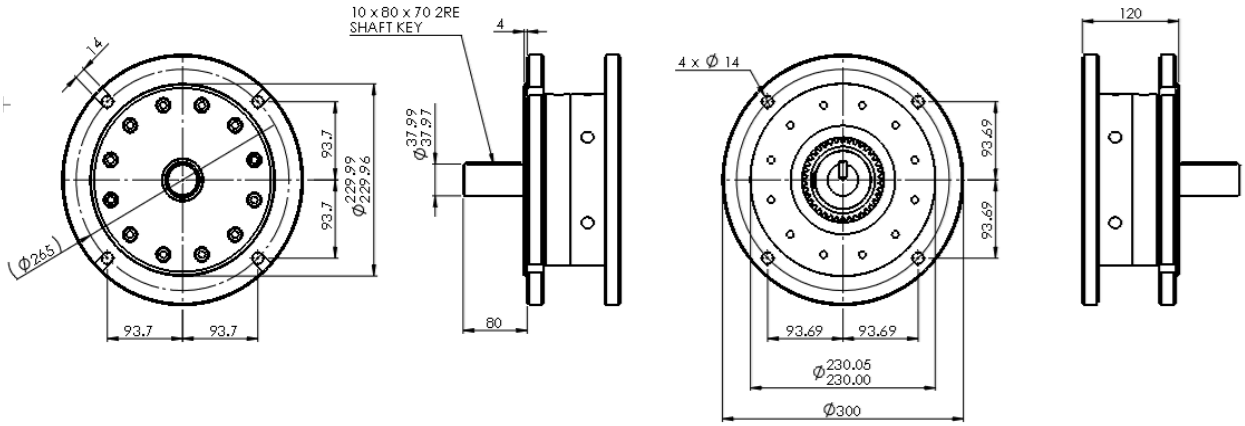

ARMAX BRAKES

AGP07 AGP10 AGP16 Brakes

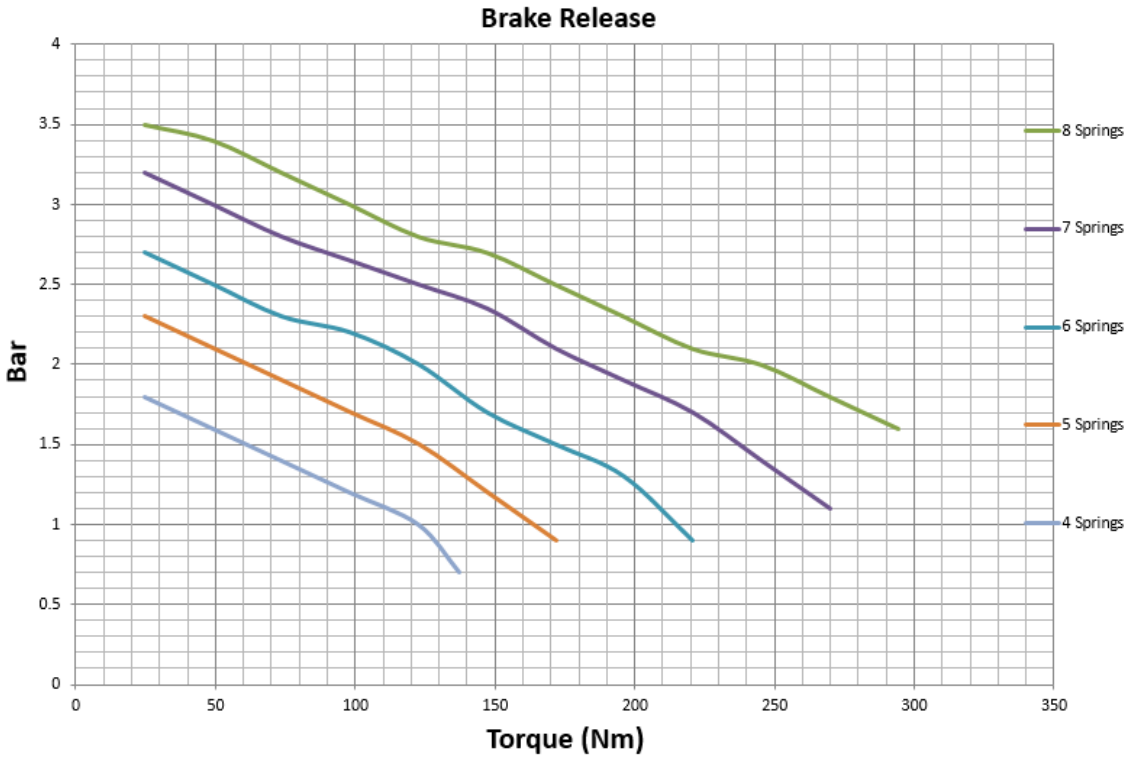

Part Number	Torque (Nm)	Release Pressure (Bar)	Number of Springs
404-001	270	3.5	8
404-015	250	3.2	7
404-007	220	2.7	6
404-008	170	2.3	5
404-017	120	1.8	4

ARMAX BRAKES

An example of a typical AGP10 complete assembly

AGP10FKCPSK

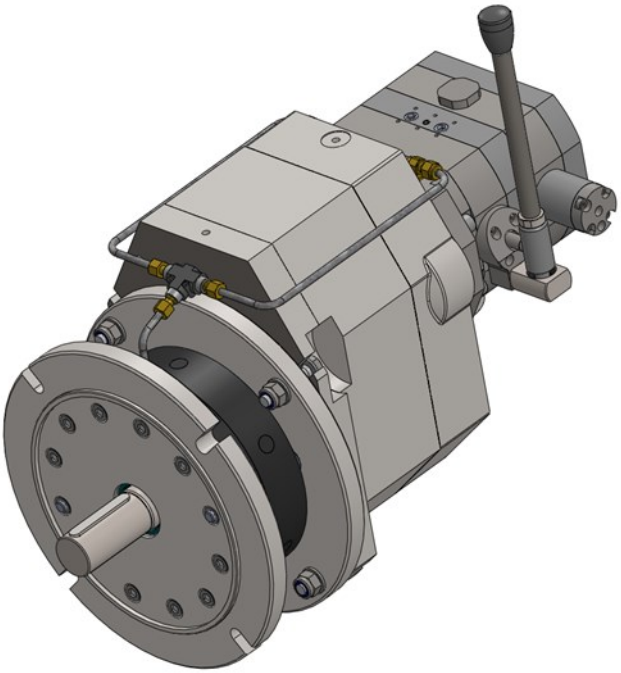

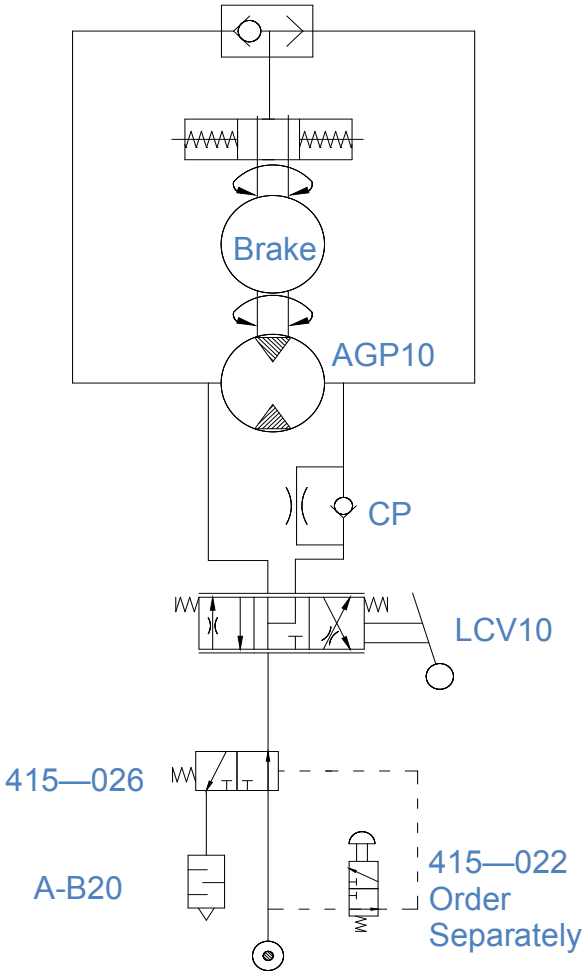

When supplied as an assembly, the brake comes complete with integral pipe work and shuttle valve

CHECK PLATE

The check plate is placed in the port which is exhausting when the load is back driving the motor. The check plate orifices must be sized to the dynamic requirements of the application. The blank is supplied with 4x2mm pre-drilled holes. On installation, the holes must be sized to offer dynamic braking. The back pressure must be such that the brake is fully disengaged (see brake release pressures for level) when max load is applied to the motor.

Guidance for approximate sizes are shown in the operating and maintenance manual with respect to motor size and brake release conditions.

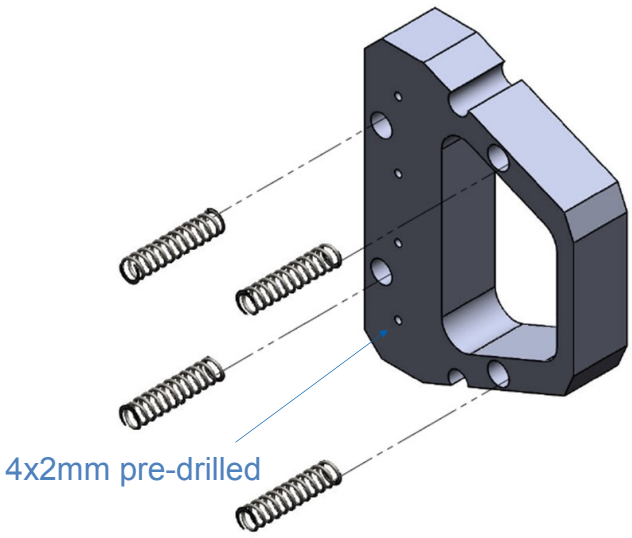

The combination of proportional valve and check plate gives unsurpassed control for dynamic braking, even under maximum load lowering conditions, ensuring the brake remains as a static device only.

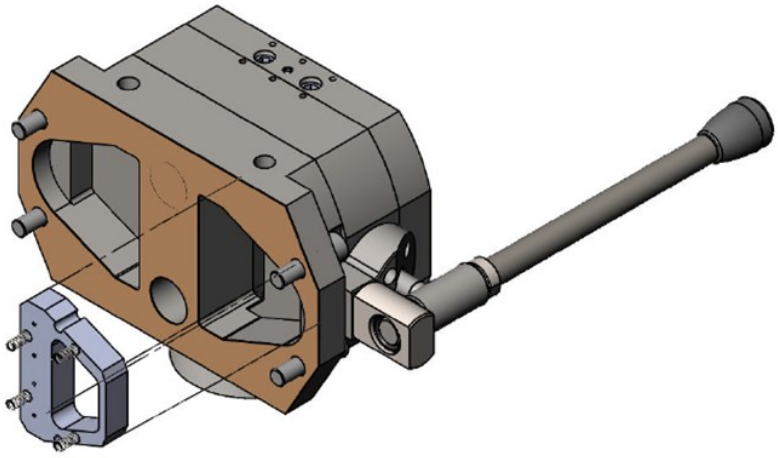

Geared Piston Motors GP

Output

Motor

Control

Accessories

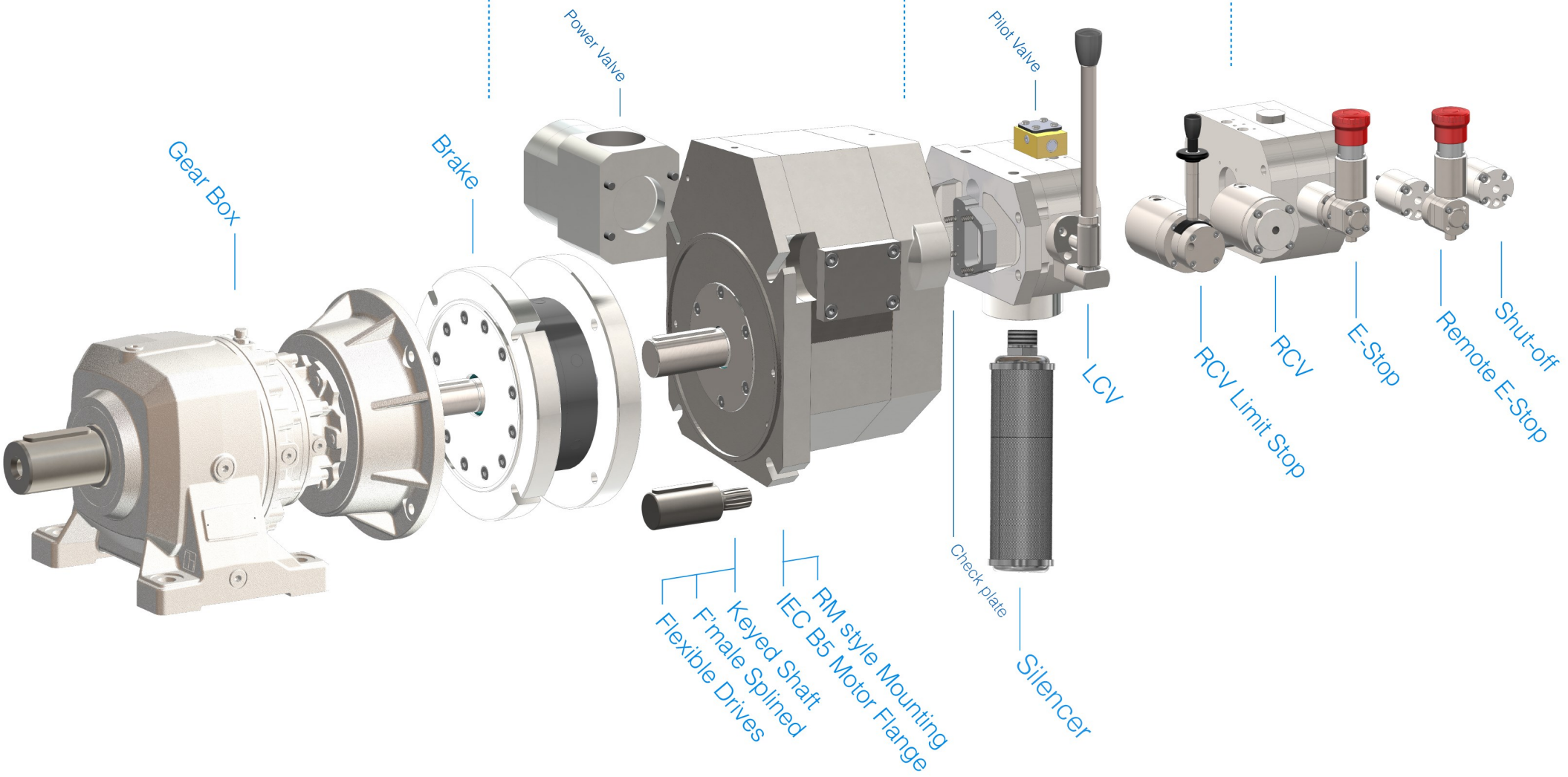

ASSEMBLY ORDERING CODE

Geared Piston Air Motors GP

sales@armak.co.uk
www.armak.co.uk

① MEDIUM

A	Air
G	Gas
W	Water

② POWER

01	1.8kW
04	4kW
06	6kW
07	7kW
10	10kW
16	16kW
110	1.8kW
210	4kW
310	7kW
410	10kW
510	16kW

③ MOUNTING*

B	D80
	Suitable For: 1,4& 6kW
F	D132
	Suitable For: 7,10,16kW
V	D132 w/F-splined Shaft
	Suitable For: 7,10,16kW
X	Special

④ VALVE & PORTS

	Suitable For: 7,10,16kW,310,410&510
A	2" BSPP
	Suitable For: 1&4kW
B	1 1/2" BSPP
	Suitable For: 1,4& 6kW,110&210
E	3/4" BSPP
	Suitable For:1,4,7&10kW 210,310&410
J	LCV Bias CW
K	LCV Bias ACW
L	LCV Equal Power
R	RCV Equal Power
V	RCV Bias CW
W	RCV Bias ACW
	Suitable For:6kW,16kW & 510 Only
M	LCV+Pilot, CW Power
N	LCV+Pilot, ACW Power
O	LCV+Pilot, Equal Power
P	Power Valve
S	RCV+Pilot, CW Power
T	RCV+Pilot, ACW Power
U	RCV+Pilot, Equal Power
Y	Over speed valve CW Power
Z	Over speed valve ACW Power

⑤ ACCESSORIES

A	Helical Gear Base Mt.
G	Helical Gear Face Mt.
CP	Check Plate
E	Shut off with Integral E-stop
R	Shut off with Remote E-stop
S	Shut off Only
K	Brake

BUILDING YOUR CODE

① – What medium is your motor running?

② – Power requirements or do you need an RM Replacement

③ – What is your Flange Mounting?
*Not required for 110, 220, 310, 410 & 510

④ – Do you require a ported motor or a directional valve?

⑤ – Add one or multiple accessories.

EXAMPLES

① … GP ② … ③ … ④ … ⑤

- ① Air motor **A**, ②16kW **GP16,** ③D132 Flange with Female Spline **V,** ④Lever Control Valve (LCV)+ Power Valve (P) CW Power **M,** ⑤ Bias ACW Check Plate **CP.** **ORDERING CODE : AGP16VMCP**

- ① Air motor **A**, ②16kW **GP16,** ③D132 Flange with Female Spline **V,** ④Remote Control Valve (RCV)+ Power Valve (P) CW Power **S,** ⑤ Bias ACW Check Plate **CP.** ⑤ E-stop **E**

  ORDERING CODE : AGP16VSCPE

- ① Air motor **A**, ②4kW **GP210,** ④Lever Control Valve (LCV) Bias CW **J**

  ORDERING CODE : AGP210J

NOTES & ABBREVIATIONS

Bias CW	– Denotes reduced power in the clockwise direction (viewed on shaft)
CP	– Check plates are added to give 16kW motors a Bias Direction using the Accessories.
…+P,CW Power	– Denotes Control Valve with a Power Valve. This will have high power in the clockwise direction when viewed On the shaft.
CW	– Clockwise direction (viewed on shaft)
ACW	– Anti-clockwise direction (viewed on shaft.

Armak Ltd.
Alexandra House, English street, Hull, East Yorkshire HU3 2DJ, United Kingdom
Tel: +44 (0)1482 595 000 E-mail: sales@armak.co.uk

Issue 03.20

Whilst every endeavour has been made to ensure accuracy, this publication cannot be considered to represent part of any contract, whether expressed or implied. The publishers reserve the right to amend specification at their discretion.

VALVE & ACCESSORY SPARES ORDERING CODE

For Geared Piston Air Motors GP

sales@armak.co.uk

www.armak.co.uk

① VALVE DESIGN

- **LCV**
- **RCV**

② POWER

01	1.8kW
04	4kW
06	6kW
07	7kW
10	10kW
16	16kW

③ VALVE CONFIGURATION

Suitable For:1,4,7&10kW 210,310&410

J	LCV Bias CW
K	LCV Bias ACW
L	LCV Equal Power
R	RCV Equal Power
V	RCV Bias CW
W	RCV Bias ACW

Suitable For: 6kW, 16kW & 510 Only

M	LCV+Pilot, CW Power
N	LCV+Pilot, ACW Power
O	LCV+Pilot, Equal Power
P	Power Valve
S	RCV+Pilot, CW Power
T	RCV+Pilot, ACW Power
U	RCV+Pilot, Equal Power
Y	Over speed valve CW Power
Z	Over speed valve ACW Power

④ ACCESSORIES

CP	Check Plate
E	Shut off with Integral E-stop
R	Shut off with Remote E-stop
S	Shut off Only

BUILDING YOUR CODE

① – Type of control– lever or remote?

② – What is your motor size?

③ – Equi Power or Biased?

④ – Add one or multiple accessories.

④a) – Check Plate for dynamic braking?

④b) – Safety valve required?

EXAMPLES

① … ② … ③ — ④

Example 1

① Lever Control Valve **LCV** ②10kW **GP10,** ③Bias Reduced Power Valve in Anti Clockwise Direction (ACW) **K**

ORDERING CODE : LCV10K

Example 2

① Remote Control Valve **RCV** ②16kW **GP16,** ③Pilot Valve to operate Power Valve (P) mounted to give power in Anti Clockwise Shaft Rotation (ACW) **T—**④a) Check Plate **CP.** ④b) Shut off only **S**

ORDERING CODE : RCV16T—CPS

NOTES & ABBREVIATIONS

Bias CW	– Denotes reduced power in the clockwise direction (viewed on shaft)
CP	– Check plates are added to give 16kW motors a Bias Direction using the Accessories.
…+P,CW Power	– Denotes Control Valve with a Power Valve. This will have high power in the clockwise direction when viewed On the shaft.
CW	– Clockwise direction (viewed on shaft)
ACW	– Anti-clockwise direction (viewed on shaft.

Armak Ltd.
Alexandra House, English street, Hull, East Yorkshire HU3 2DJ, United Kingdom
Tel: +44 (0)1482 595 000 E-mail: sales@armak.co.uk

Issue 03.20

Whilst every endeavour has been made to ensure accuracy, this publication cannot be considered to represent part of any contract, whether expressed or implied. The publishers reserve the right to amend specification at their discretion.